YAMAHA

PARTS CATALOGUE

YFZ450RY (18P1) U.S.A.

1H18P-110E1

( )

YAMAHA GENUINE Parts & Accessories

YFZ450RY
PARTS CATALOGUE
©2008 by Yamaha Motor Co., Ltd.
1st edition, October 2008
All rights reserved.
Any reprinting or unauthorized use
without the written permission of
Yamaha Motor Co., Ltd.
is expressly prohibited.
Printed in Japan.

FOREWORD

This Parts Catalogue is related to the parts for the model(s) on the cover page. When you are ordering replacement parts, please refer to this Parts Catalogue and quote both part numbers and part names correctly.

1. Modifications or additions which have been made after the issue of the Parts Catalogue will be announced in the Parts News.
   It is advisable that you make the necessary corrections to the Parts Catalogue according to the Parts News.

2. Abbreviations
   The following abbreviations are used in this Parts Catalogue.

   “UR” Use specified parts number.
   “UN” Use as many as needed.
   “AP” Alternate Parts
   “LM” Locally Made (Parts need to be ordered locally)
   “F#” Frame No. (Applicable machine No.)
   “O/S” Over Size

3. The number of components for assembly
   - Parts, which are to be supplied in an assembly, are listed with a dot (.) in front of the part name as shown below.
   - The numeral appearing to the right of each component part indicates the quantity of parts for each assembly unit.

PART NO.	DESCRIPTION	Q’TY	REMARKS
2F5–83310–60	FRONT FLASHER LIGHT ASSY	2	
115–83311–60	.BULB (6V–18W)	1	

4. Applicable colours of graphics are represented in the “REMARKS” as shown below.

PART NO.	DESCRIPTION	Q’TY	REMARKS
2N4–24110–00–X5	FUEL TANK COMP.	2	MXR
3J1–24240–10	.GRAPHIC, FUEL TANK	1	FOR MXR

5. Note that the illustrations for reference in finding parts numbers are not to be used for assembling. When assembling, please use the applicable service manual.

6. The asterisk (*) before a reference number indicates modified items after the first edition.

7. Applicable Serial No.

Engine Serial No.

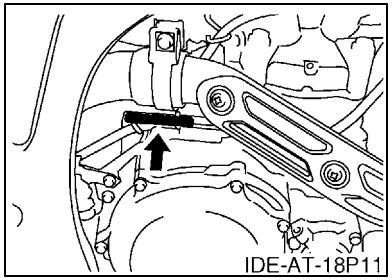

Frame Serial No.

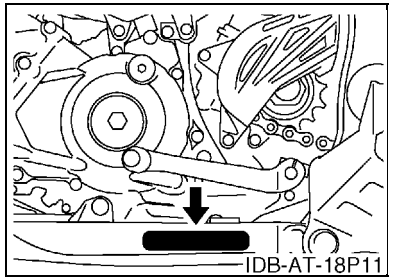

8. Applicable Colour Code (The (*) mark shows Model colour.)

Abbreviation	Colour Name	Colour Code
BWS1(*)	BLUISH WHITE SOLID 1	0892
DPBSE(*)	DEEP PURPLISH BLUE SOLID E	0583
S8	SILVER 8	0895
YB	YAMAHA BLACK	0033

9. Quantity Column Information

Column No.	Name Of Q’ty Column	Destination
1	USA	U.S.A.

MODEL LABEL

(1) A label called “Model Label” is affixed in the location as indicated in (3) below.
When using this parts catalogue, please be sure to cross–reference the “model code – production code No.” in the catalogue with the “model code – production code No.” indicated on the Model Label affixed onto the product concerned.

(2) “Model Label” Indication

a b ○ xxxx – xxx ● x c	a: Model Type Code b: Production Code No. c: Colouring Type

○ 4TW1–010 ● A

(3) Model Label Affixing Location

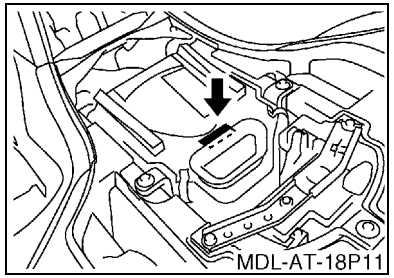

(4) Colouring Information

Model Code	Colouring Type Code	Colour Code	Colour Name	Abbreviation
18P1	A	0583	DEEP PURPLISH BLUE SOLID E	DPBSE
	B	0892	BLUISH WHITE SOLID 1	BWS1

(5) Model Code – Production Code Number of Model Listed in This Parts Catalogue

Model Code	Production Code No.	Country (destination)	Model Code	Production Code No.	Country (destination)
18P1	010	U.S.A.			

CONTENTS

ENGINE

CYLINDER 1
CRANKSHAFT & PISTON 3
VALVE 4
CAMSHAFT & CHAIN 6
WATER PUMP 7
RADIATOR & HOSE 8
OIL PUMP 9
INTAKE 10
THROTTLE BODY ASSY 1 12
EXHAUST 13
CRANKCASE 14
CRANKCASE COVER 1 15
STARTER 18
CLUTCH 19
TRANSMISSION 21
SHIFT CAM & FORK 23

CHASSIS

FRAME 25
FRONT FENDER 27
REAR FENDER 28
SIDE COVER 30
REAR ARM 32
REAR SUSPENSION 35
STEERING 36
FRONT SUSPENSION & WHEEL 37
FUEL TANK 39
SEAT 40
FRONT WHEEL 41
FRONT BRAKE CALIPER 42
REAR WHEEL 44
REAR BRAKE CALIPER 45
STEERING HANDLE & CABLE 46
FRONT MASTER CYLINDER 48
STAND & FOOTREST 49
REAR MASTER CYLINDER 50
GUARD 52
GENERATOR 53
STARTING MOTOR 54
HEADLIGHT 55
TAILLIGHT 56
HANDLE SWITCH & LEVER 57
ELECTRICAL 1 58
GRAPHICS 61
EMBLEM & LABEL 1 62

INDEX

NUMERICAL INDEX 63

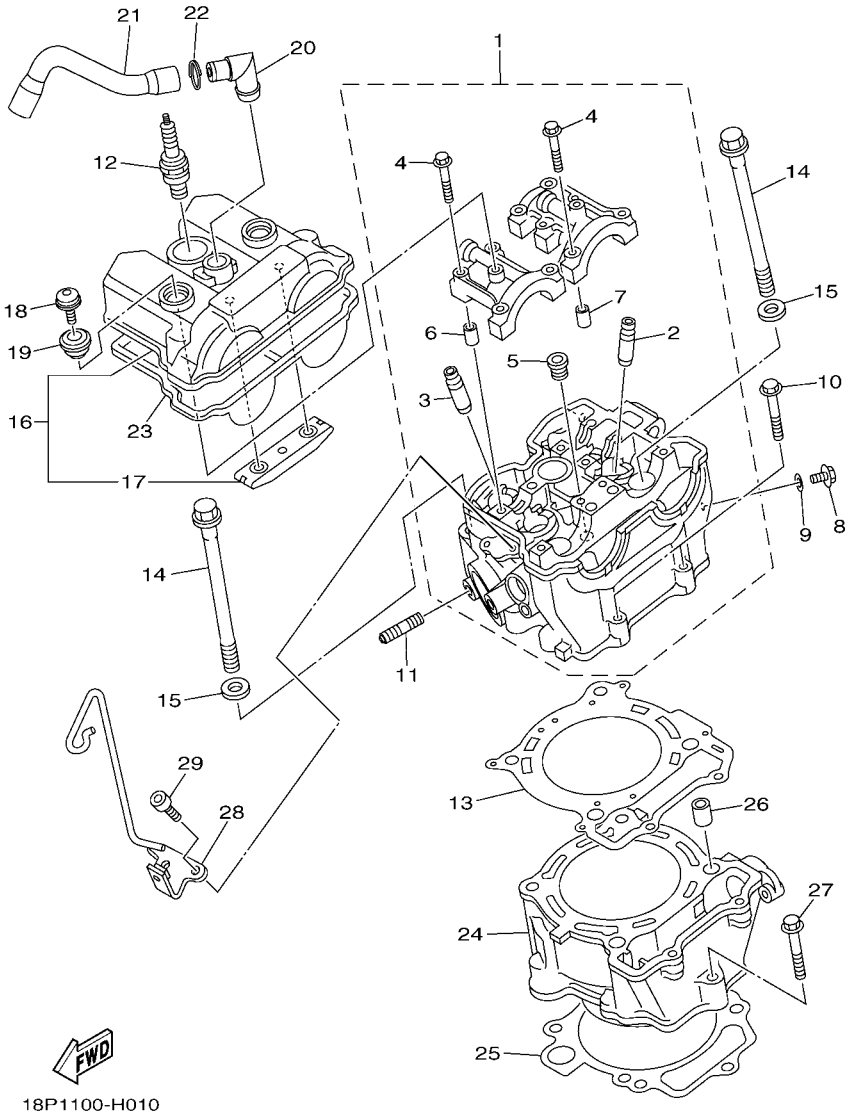

FIG. 1 CYLINDER

REF. NO.	PART NO.	DESCRIPTION	USA					REMARKS
1	18P–11102–00	CYLINDER HEAD ASSY	1					
2	5TA–11133–10	.GUIDE, VALVE 1	3					
3	5TA–11134–10	.GUIDE, VALVE 2	2					
4	90105–06027	.BOLT, FLANGE	10					
5	90340–12007	.PLUG, STRAIGHT SCREW	1					
6	91808–16023	.PIN, DOWEL	2					
7	91808–16023	.PIN, DOWEL	2					
8	95022–06010	BOLT, FLANGE	1					
9	90430–06014	GASKET	1					
10	95022–06035	BOLT, FLANGE	2					
11	90116–08022	BOLT, STUD	2					
12	94701–00330	PLUG, SPARK (NGK CR8E)	1					
13	2S2–11181–00	GASKET, CYLINDER HEAD 1	1					
14	90105–10163	BOLT, FLANGE	4					
15	90201–10025	WASHER, PLATE	4					
16	2S2–11190–20	COVER, CYLINDER HEAD 1	1					
17	5BE–12241–00	.GUIDE, STOPPER 2	1					
18	90109–06203	BOLT	2					
19	5VY–1111G–00	RUBBER, MOUNT 1	2					
20	18P–11167–00	PIPE, BREATHER 2	1					
21	18P–11166–00	PIPE, BREATHER 1	1					
22	90468–100A1	CLIP	1					
23	2S2–11193–00	GASKET, HEAD COVER 1	1					
24	2S2–11311–10	CYLINDER 1	1					
25	2S2–11351–00	GASKET, CYLINDER	1					
26	93612–16254	PIN, DOWEL	2					
27	95022–06035	BOLT, FLANGE	1					

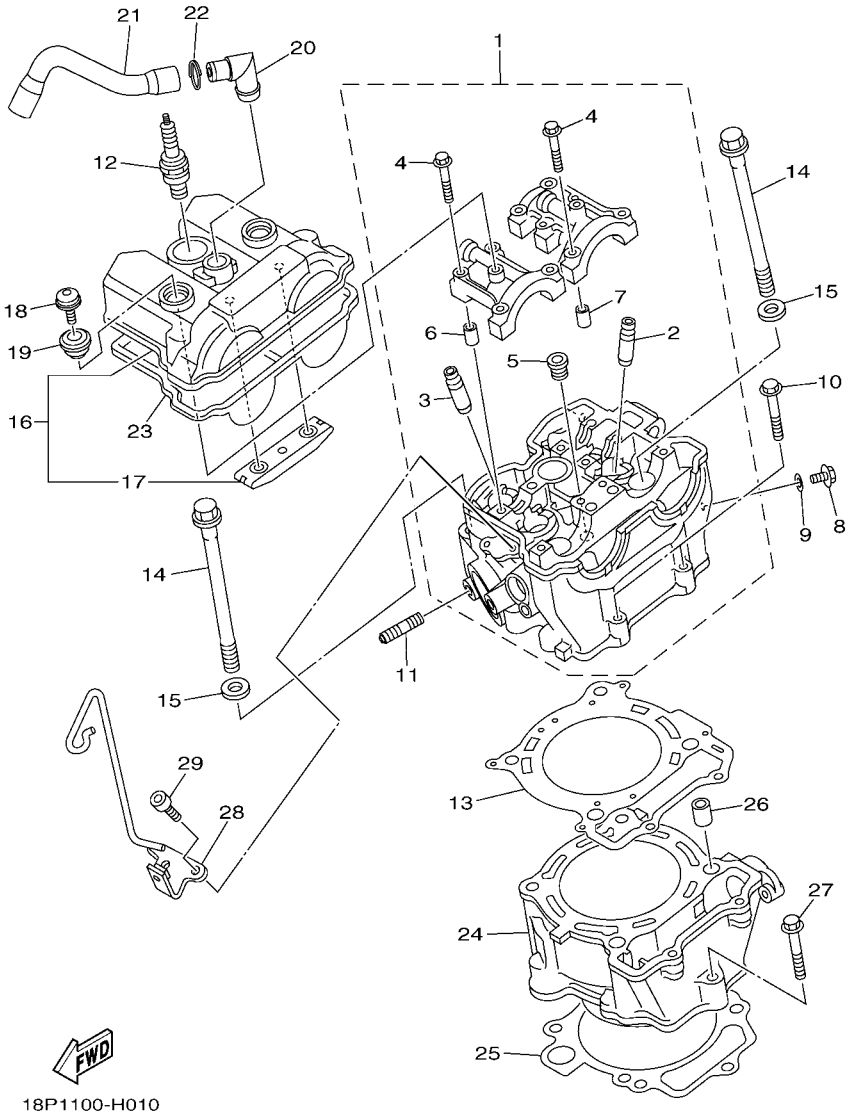

FIG. 1 CYLINDER

REF. NO.	PART NO.	DESCRIPTION	USA					REMARKS
28	18P–11395–00	HOLDER	1					
29	91312–06014	BOLT	2					

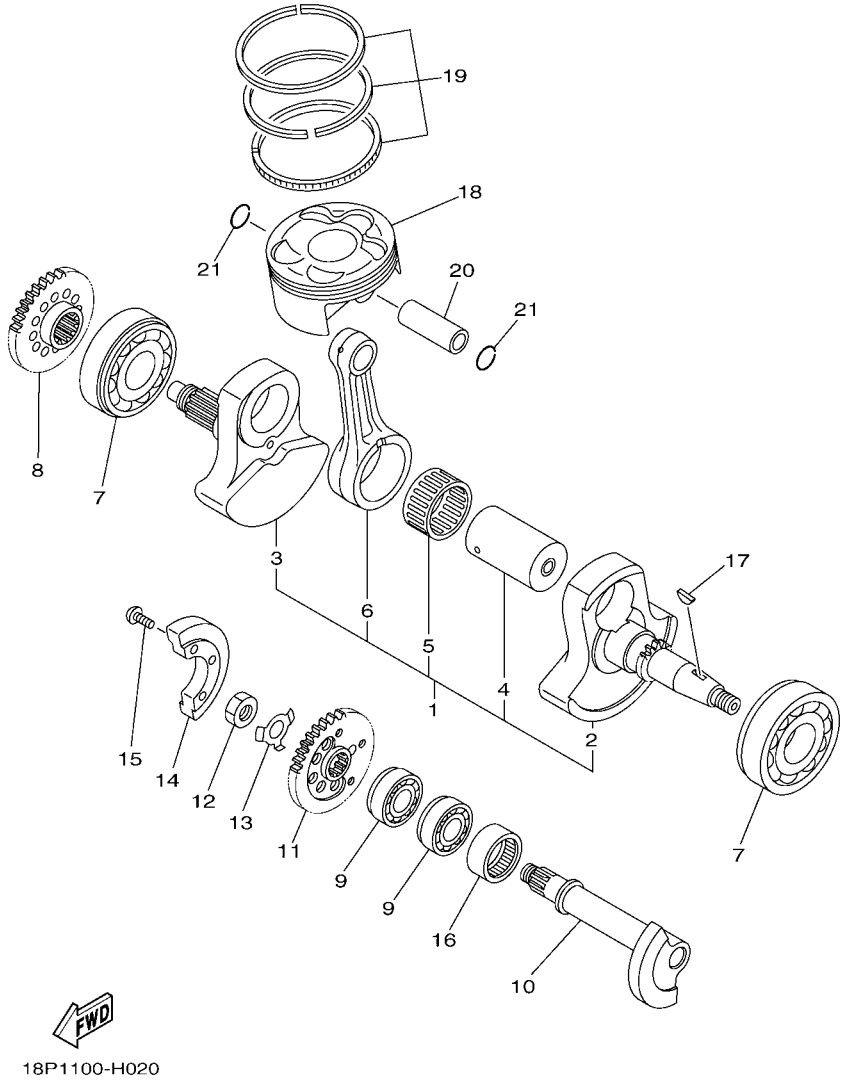

FIG. 2 CRANKSHAFT & PISTON

REF. NO.	PART NO.	DESCRIPTION	USA					REMARKS
1	18P–11400–00	CRANKSHAFT ASSY	1					
2	18P–11412–00	.CRANK 1	1					
3	18P–11422–00	.CRANK 2	1					
4	18P–11681–00	.PIN, CRANK 1	1					
5	93310–73606	.BEARING	1					
6	18P–11651–00	.ROD, CONNECTING	1					
7	93306–30644	BEARING	2					
8	18P–11536–00	GEAR, DRIVE	1					
9	93306–20353	BEARING	2					
10	18P–11455–00	SHAFT 1	1					
11	18P–11531–00	GEAR, BALANCE WEIGHT	1					
12	90170–14171	NUT	1					
13	90215–14287	WASHER, LOCK	1					
14	18P–11454–00	WEIGHT 1	1					
15	90149–06069	SCREW	3					
16	93311–62574	BEARING	1					
17	90280–03006	KEY, WOODRUFF	1					
18	5TG–11631–11	PISTON (STD)	1					
19	5TG–11603–00	PISTON RING SET (STD)	1					
20	5TG–11633–10	PIN, PISTON	1					
21	93450–22027	CIRCLIP	2					

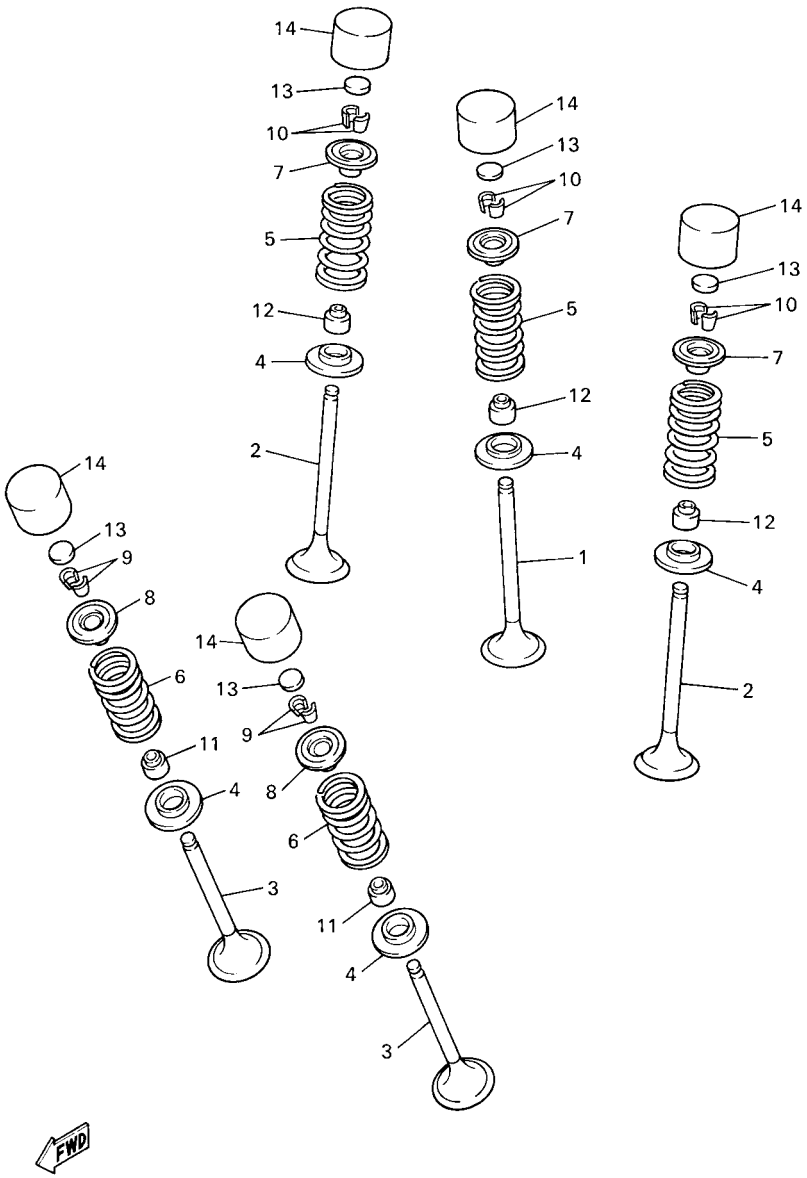

5BE100-8030

FIG. 3 VALVE

REF. NO.	PART NO.	DESCRIPTION	USA					REMARKS
1	5TA–12111–00	VALVE, INTAKE	1					
2	5TA–12112–00	VALVE, INTAKE 2	2					
3	5TA–12121–00	VALVE, EXHAUST	2					
4	3GM–12126–00	SEAT, VALVE SPRING 2	5					
5	5TJ–12113–00	SPRING, VALVE INNER	3					
6	5TA–12114–00	SPRING, VALVE OUTER	2					
7	5BE–12117–00	RETAINER, VALVE SPRING	3					
8	4GY–12117–00	RETAINER, VALVE SPRING	2					
9	1AA–12118–00	COTTER, VALVE	4					
10	1WG–12118–00	COTTER, VALVE	6					
11	33M–12119–00	SEAL, VALVE STEM	2					
12	4SV–12119–00	SEAL, VALVE STEM	3					
13	3LD–12168–00	PAD, ADJUSTING (1.20)	5					UR
	3LD–12168–20	PAD, ADJUSTING (1.25)	5					UR
	3LD–12168–40	PAD, ADJUSTING (1.30)	5					UR
	3LD–12168–60	PAD, ADJUSTING (1.35)	5					UR
	3LD–12168–80	PAD, ADJUSTING (1.40)	5					UR
	3LD–12168–A0	PAD, ADJUSTING (1.45)	5					UR
	3LD–12168–F0	PAD, ADJUSTING (1.50)	5					UR
	3LD–12168–H1	PAD, ADJUSTING (1.55)	5					UR
	3LD–12168–K1	PAD, ADJUSTING (1.60)	5					UR
	3LD–12168–M1	PAD, ADJUSTING (1.65)	5					UR
	3LD–12168–R1	PAD, ADJUSTING (1.70)	5					UR
	3LD–12168–U1	PAD, ADJUSTING (1.75)	5					UR
	3LD–12168–W1	PAD, ADJUSTING (1.80)	5					UR
	3LD–12168–Y1	PAD, ADJUSTING (1.85)	5					UR
	3LD–12169–11	PAD, ADJUSTING (1.90)	5					UR

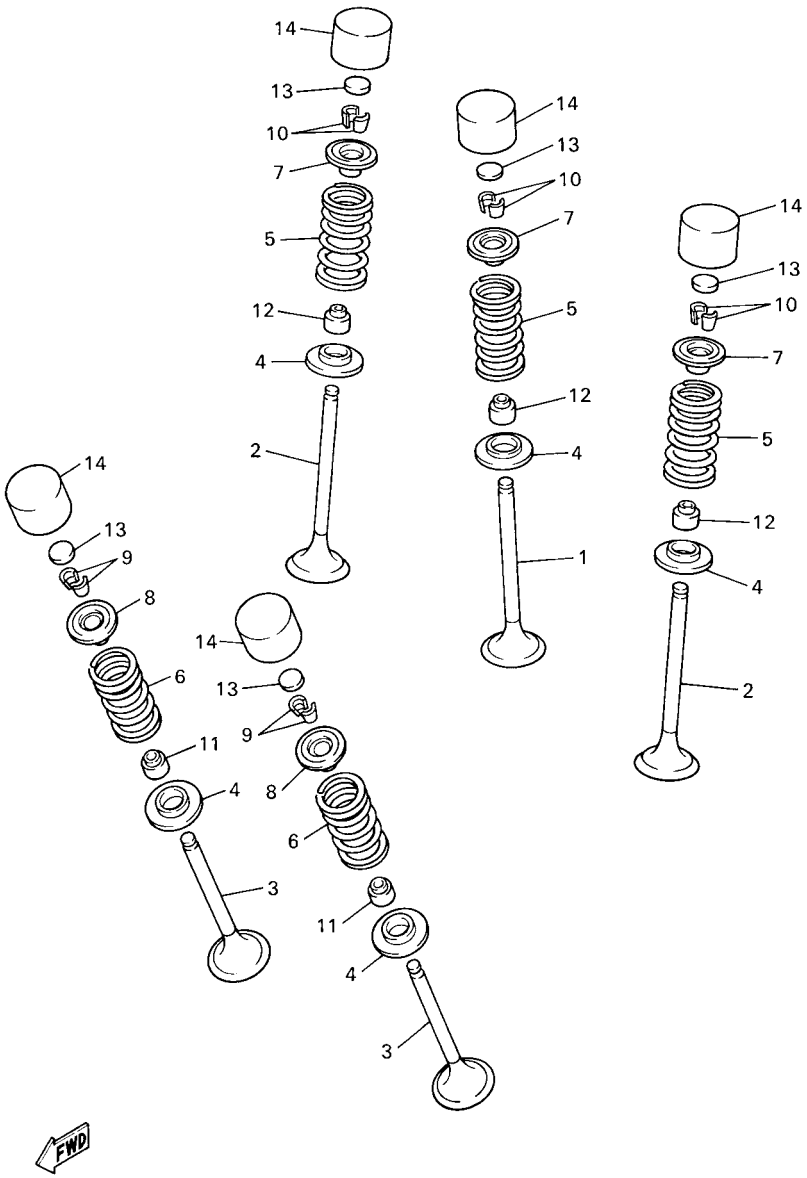

5BE100-8030

FIG. 3 VALVE

REF. NO.	PART NO.	DESCRIPTION	USA					REMARKS
13	3LD–12169–31	PAD, ADJUSTING (1.95)	5					UR
	3LD–12169–50	PAD, ADJUSTING (2.00)	5					UR
	3LD–12169–70	PAD, ADJUSTING (2.05)	5					UR
	3LD–12169–90	PAD, ADJUSTING (2.10)	5					UR
	3LD–12169–E0	PAD, ADJUSTING (2.15)	5					UR
	3LD–12169–G0	PAD, ADJUSTING (2.20)	5					UR
	3LD–12169–J0	PAD, ADJUSTING (2.25)	5					UR
	3LD–12169–L0	PAD, ADJUSTING (2.30)	5					UR
	3LD–12169–N0	PAD, ADJUSTING (2.35)	5					UR
	3LD–12169–T0	PAD, ADJUSTING (2.40)	5					UR
14	3FV–12153–10	LIFTER, VALVE	5					YELLOW

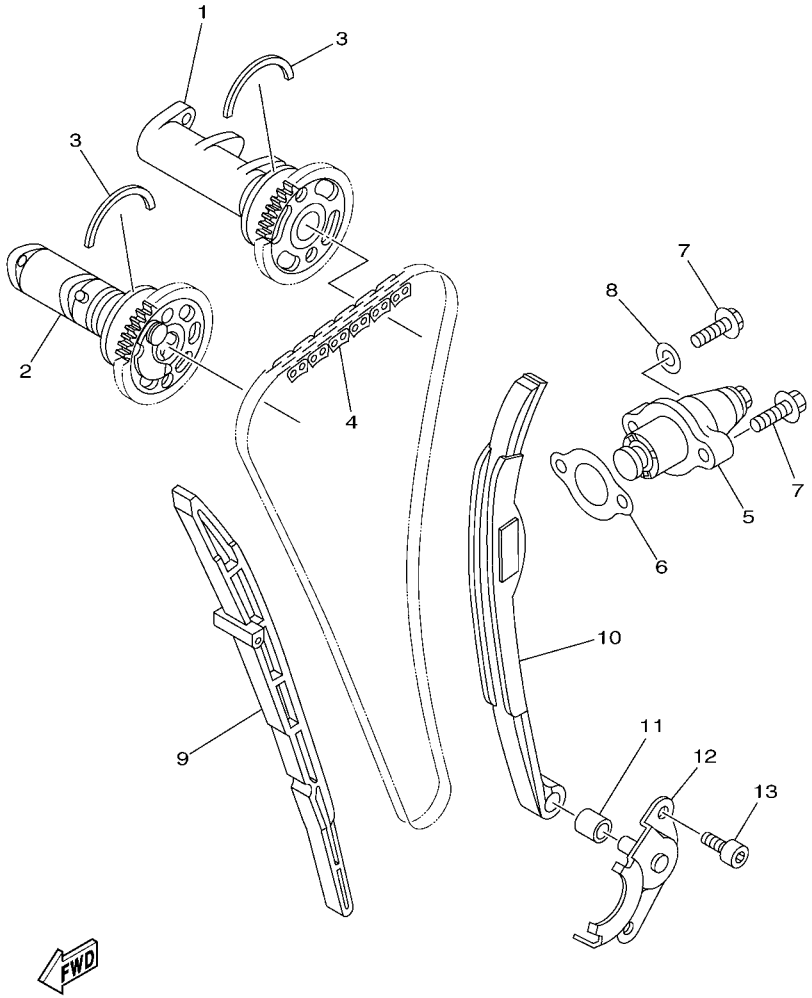

FIG. 4 CAMSHAFT & CHAIN

REF. NO.	PART NO.	DESCRIPTION	USA					REMARKS
1	18P–12170–00	CAMSHAFT ASSY 1	1					
2	18P–12180–00	CAMSHAFT ASSY 2	1					
3	93440–41178	CIRCLIP	2					
4	94591–57120	CHAIN (98XRH2010-120M)	1					
5	5TA–12210–10	TENSIONER ASSY, CAM CHAIN	1					
6	4FM–12213–00	GASKET, TENSIONER CASE	1					
7	95022–06025	BOLT, FLANGE	2					
8	90430–06014	GASKET	1					
9	2S2–12251–00	DAMPER, CHAIN 1	1					
10	18P–12252–00	DAMPER, CHAIN 2	1					
11	90387–07030	COLLAR	1					
12	18P–12233–00	PLATE, GUIDE STOPPER 1	1					
13	90110–06168	BOLT, HEXAGON SOCKET HEAD	2					

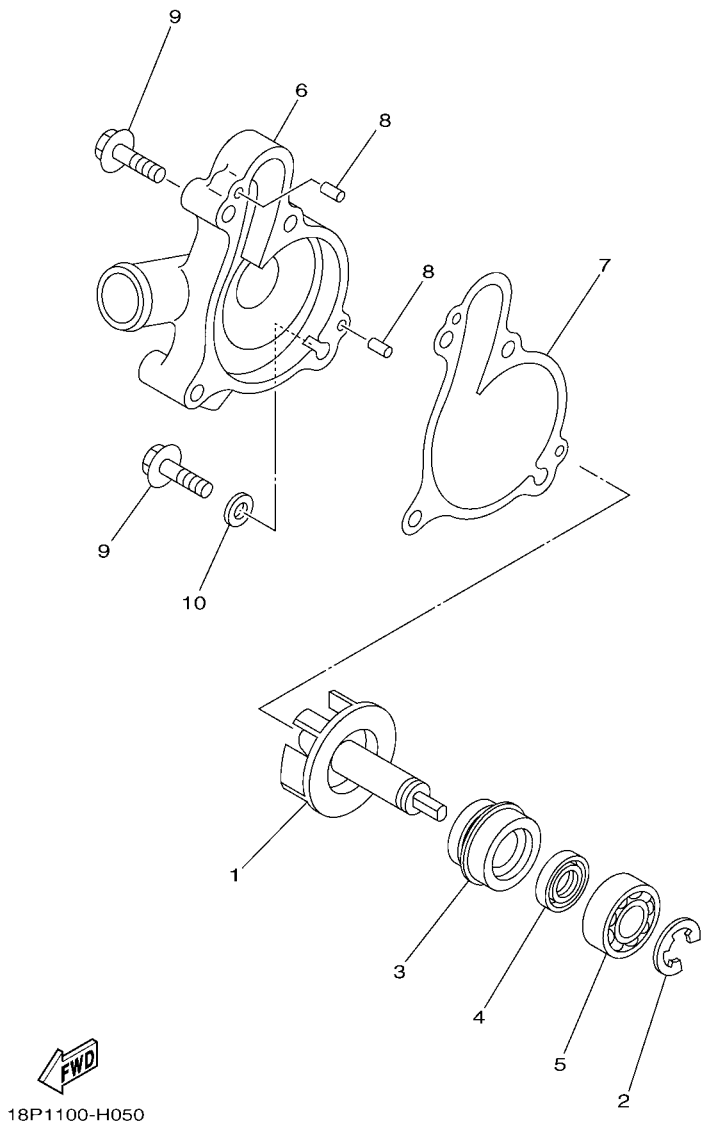

FIG. 5 WATER PUMP

REF. NO.	PART NO.	DESCRIPTION	USA					REMARKS
1	18P–12450–00	IMPELLER SHAFT ASSY	1					
2	99009–12400	CIRCLIP	1					
3	4C8–12438–00	SEAL, MECHANICAL	1					
4	93101–12173	OIL SEAL	1					
5	93306–00106	BEARING	1					
6	18P–12422–00	COVER, HOUSING	1					
7	18P–12428–00	GASKET, HOUSING COVER 2	1					
8	93604–10011	PIN, DOWEL	2					
9	95022–06030	BOLT, FLANGE	3					
10	90430–06014	GASKET	1					

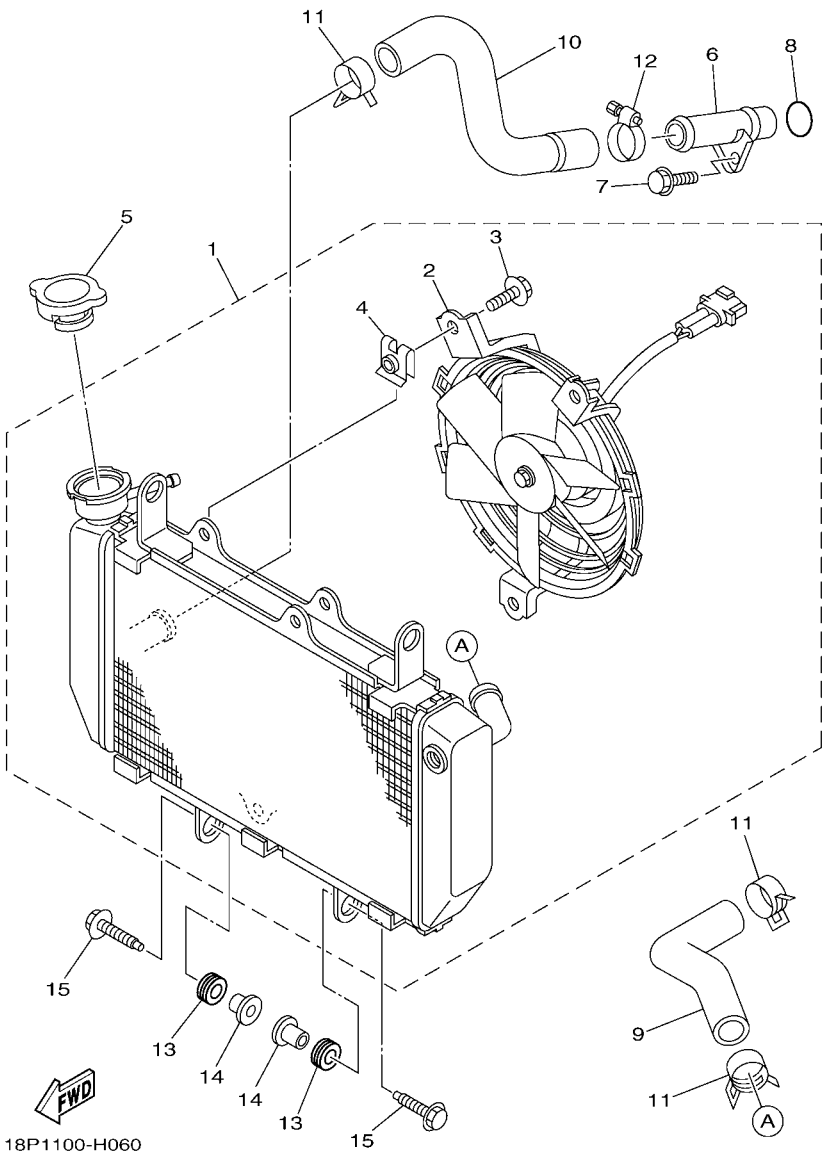

FIG. 6 RADIATOR & HOSE

REF. NO.	PART NO.	DESCRIPTION	USA					REMARKS
1	18P–1240A–00	RADIATOR ASSY	1					
2	18P–12405–00	.BLOWER ASSY	1					
3	2S3–12675–00	.BOLT, BLOWER HOLDING	3					
4	18P–12671–00	.NUT 1	3					
5	5SL–12462–00	CAP, RADIATOR	1					
6	5TG–12481–00	PIPE 1	1					
7	95022–06012	BOLT, FLANGE	1					
8	93210–16500	O-RING	1					
9	18P–12576–00	HOSE 1	1					
10	18P–12577–00	HOSE 2	1					
11	90467–23109	CLIP	3					
12	90450–32015	HOSE CLAMP ASSY	1					
13	90480–15058	GROMMET	4					
14	90387–07391	COLLAR	4					
15	90119–06181	BOLT, WITH WASHER	4					

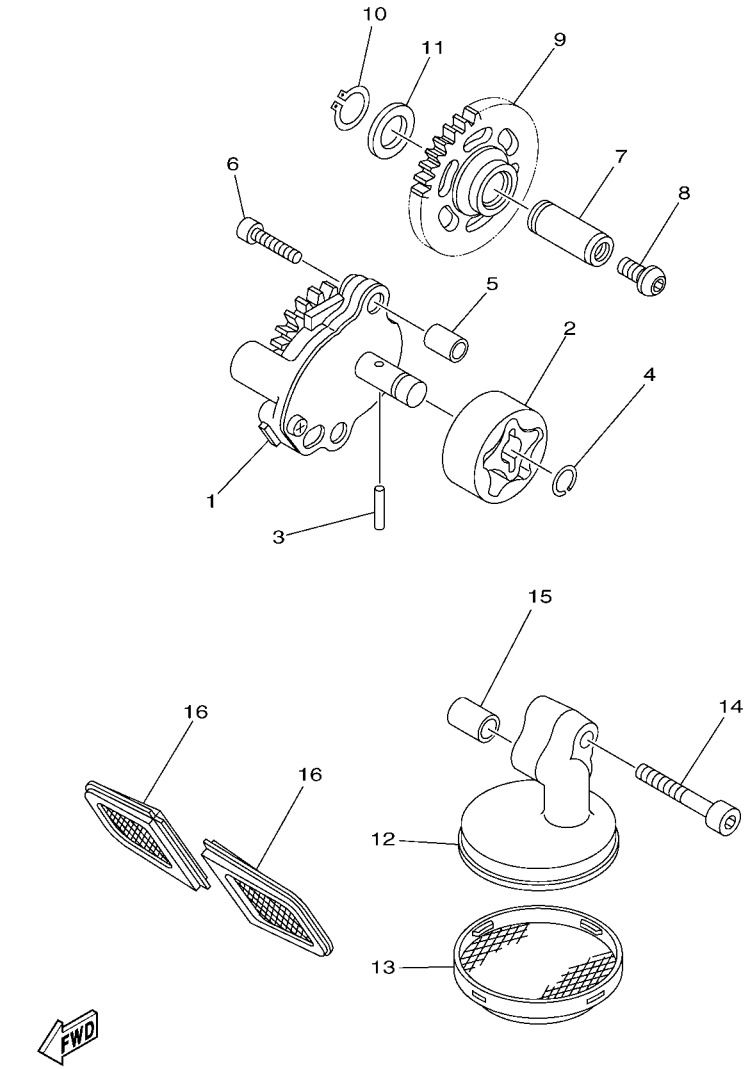

FIG. 7 OIL PUMP

REF. NO.	PART NO.	DESCRIPTION	USA					REMARKS
1	18P–13300–00	OIL PUMP ASSY	1					
2	5TA–13320–00	ROTOR ASSY 2	1					
3	93603–16219	PIN, DOWEL	1					
4	93440–10153	CIRCLIP	1					
5	99530–08012	PIN, DOWEL	2					
6	91312–06030	BOLT	2					
7	2S2–13342–00	SHAFT, IDLE GEAR	1					
8	90149–06069	SCREW	1					
9	18P–13341–00	GEAR, OIL PUMP IDLE	1					
10	99009–12400	CIRCLIP	1					
11	90201–12166	WASHER, PLATE	1					
12	18P–13412–01	HOUSING, STRAINER	1					
13	18P–13411–00	STRAINER, OIL	1					
14	90110–06208	BOLT, HEXAGON SOCKET HEAD	1					
15	99530–10114	PIN, DOWEL	1					
16	18P–13421–00	STRAINER 2	2					

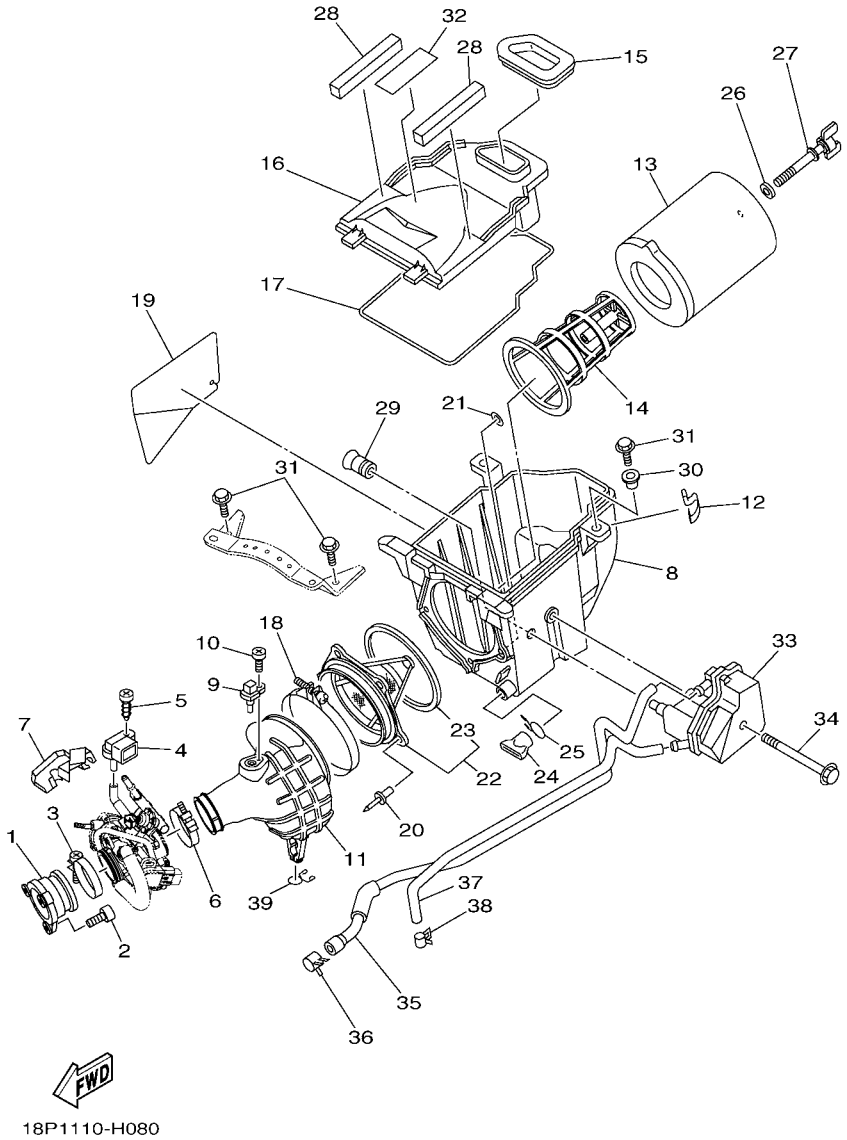

FIG. 8 INTAKE

REF. NO.	PART NO.	DESCRIPTION	USA					REMARKS
1	18P–13597–00	JOINT, CARBURETOR 3	1					
2	91312–06020	BOLT	3					
3	90450–58005	HOSE CLAMP ASSY	1					
4	5S7–82380–00	SENSOR, PRESSURE	1					
5	97702–60125	SCREW, TAPPING	1					
6	90450–54009	HOSE CLAMP ASSY	1					
7	18P–13843–00	PLATE 1	1					
8	18P–14411–00	CASE, AIR CLEANER 1	1					
9	8FP–85886–00	SENSOR, AIR TEMPERATURE	1					
10	98502–05010	SCREW, PAN HEAD	1					
11	18P–14453–00	JOINT, AIR CLEANER 1	1					
12	5GH–14436–00	HOOK	2					
13	5TG–14451–00	ELEMENT, AIR CLEANER	1					
14	5TG–14458–00	GUIDE	1					
15	18P–14479–00	FUNNEL	1					
16	18P–14412–00	CAP, CLEANER CASE 1	1					
17	5KM–14452–00	SEAL	1					
18	90450–99014	HOSE CLAMP ASSY	1					
19	18P–1442F–00	PROTECTOR	1					
20	90267–48025	RIVET, BLIND	5					
21	90201–04028	WASHER, PLATE	5					
22	5D3–14459–00	HOLDER, GUIDE	1					
23	4ES–14462–00	.SEAL	1					
24	59V–14457–00	SEAL	1					
25	90467–220A1	CLIP	1					
26	90209–06096	WASHER	1					
27	90122–06010	BOLT, WING	1					

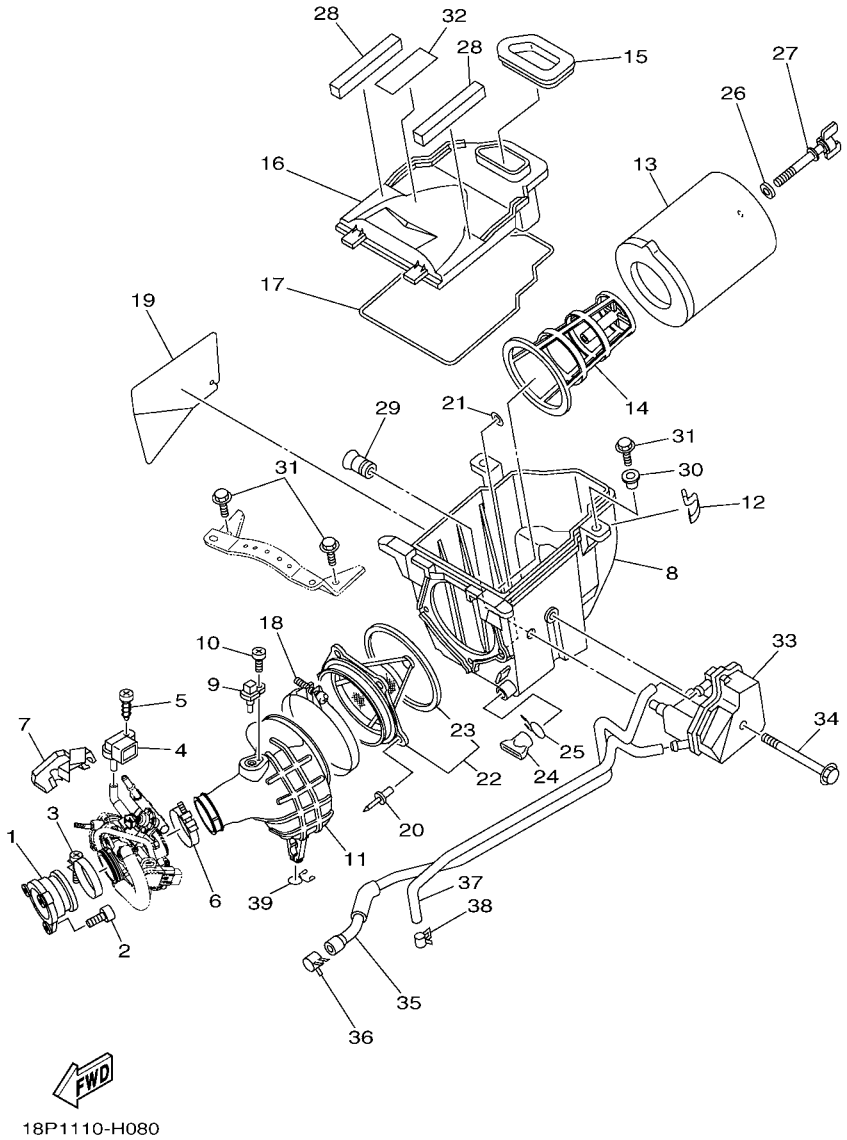

FIG. 8 INTAKE

REF. NO.	PART NO.	DESCRIPTION	USA					REMARKS
28	18P–14409–00	DAMPER	2					
29	18P–14435–00	GROMMET	1					
30	90387–08073	COLLAR	2					
31	90105–06084	BOLT, FLANGE	4					
32	18P–2177C–00	PLATE, EPA OFFROAD ATV 1	1					
33	18P–15370–00	BREATHER ASSY	1					
34	95812–06110	BOLT, FLANGE	1					
35	18P–1531A–00	HOSE, BREATHER 1	1					
36	90467–140A6	CLIP	1					
37	18P–1532A–00	HOSE, BREATHER 2	1					
38	90467–140A6	CLIP	1					
39	90467–12052	CLIP	1					

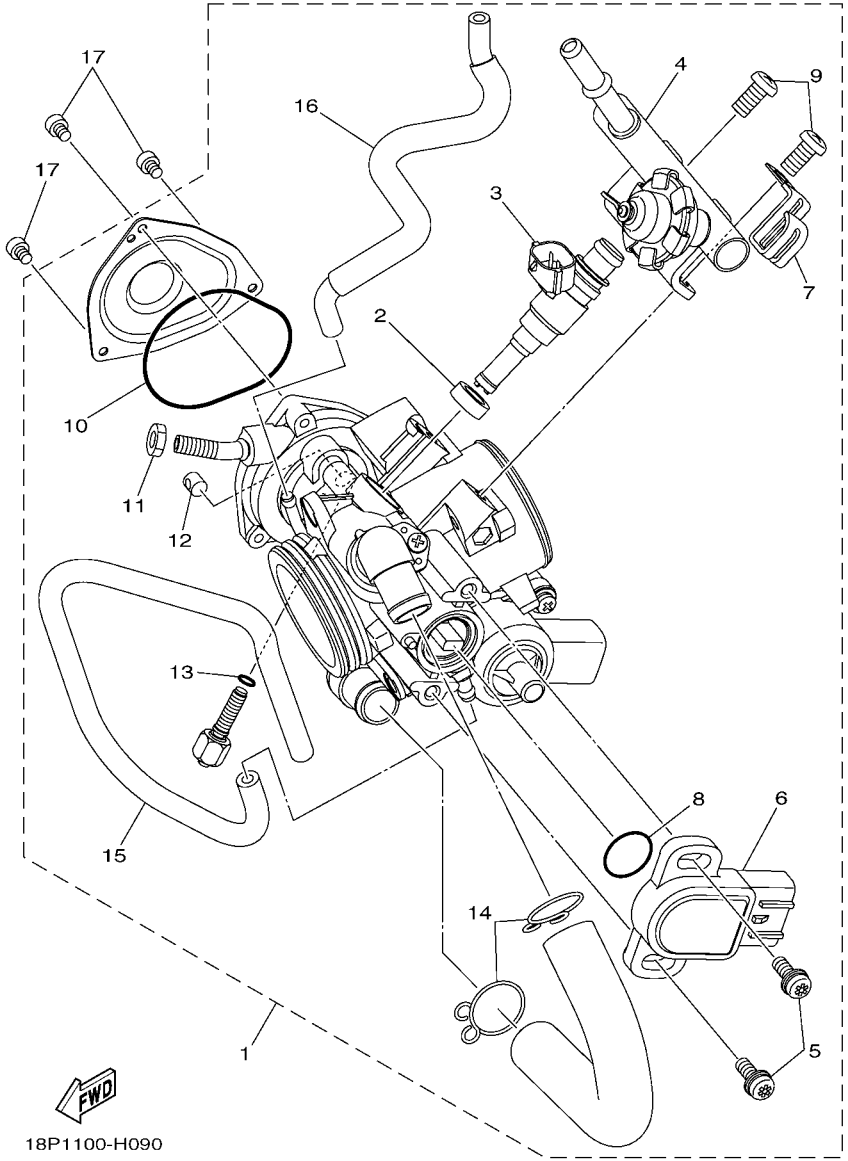

FIG. 9 THROTTLE BODY ASSY 1

REF. NO.	PART NO.	DESCRIPTION	USA					REMARKS
1	18P–13750–00	THROTTLE BODY ASSY	1					
2	8FP–13556–00	.GASKET, MANIFOLD	1					
3	3B4–13761–00	.INJECTOR	1					
4	18P–13160–00	.DELIVERY PIPE ASSY 1	1					
5	8CC–14216–10	.SCREW	2					
6	3B4–85885–00	.THROTTLE SENSOR ASSY	1					
7	5JW–14945–00	.PLATE	1					
8	5YP–14562–00	.O-RING	1					
9	98507–06012	.SCREW, PAN HEAD	2					
10	5LP–14147–00	.O-RING	1					
11	1S3–14161–00	.NUT, CABLE ADJUSTING	1					
12	1UY–14155–00	.GUIDE, CABLE	1					
13	2H0–14147–00	.O-RING	1					
14	8FP–14137–00	.CLIP	2					
15	18P–13543–00	.HOSE, AIR	1					
16	18P–14348–00	.PIPE 1	1					
17	91312–04006	BOLT	3					

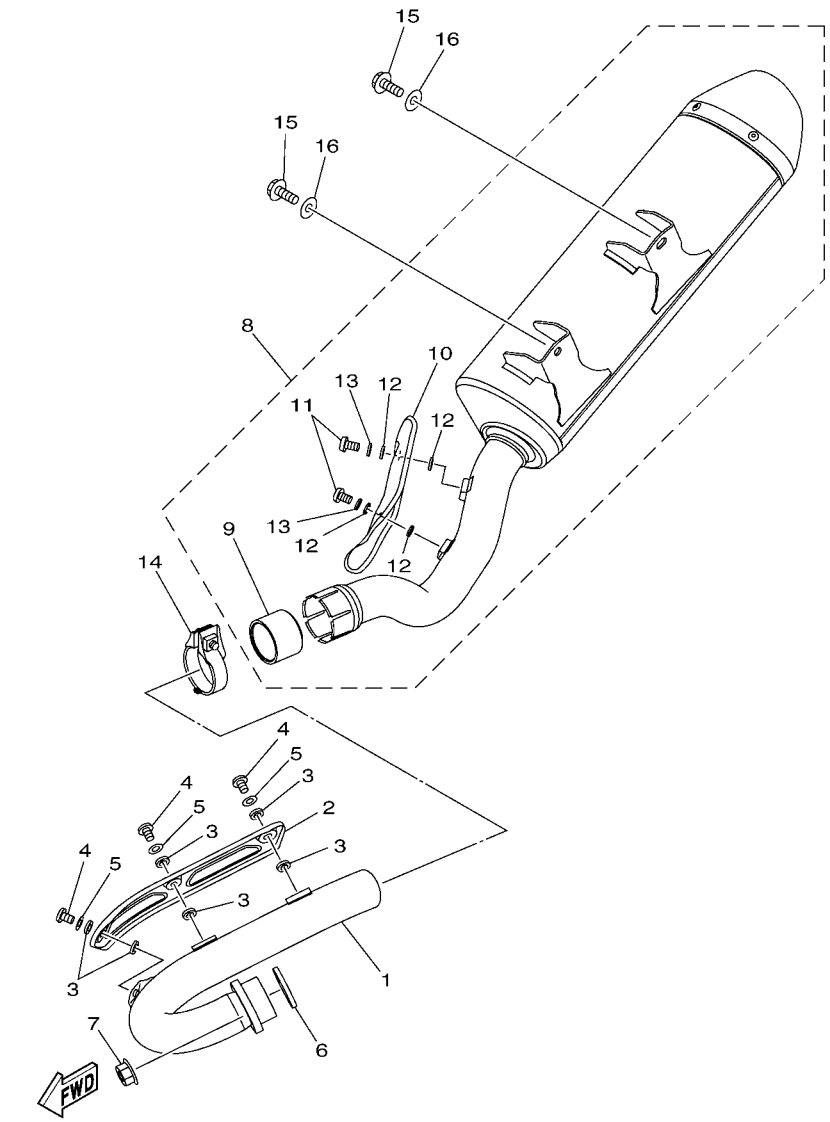

FIG. 10 EXHAUST

REF. NO.	PART NO.	DESCRIPTION	USA					REMARKS
1	18P–14611–00	PIPE, EXHAUST 1	1					
2	18P–14628–00	PROTECTOR, EXHAUST PIPE	1					
3	90201–05015	WASHER, PLATE	6					
4	98980–06010	SCREW, BIND	3					
5	92990–06200	WASHER, PLAIN	3					
6	3VD–14613–01	GASKET, EXHAUST PIPE	1					
7	95702–08500	NUT, WITH WASHER	2					
8	18P–14710–00	MUFFLER ASSY 1	1					
9	8FA–14714–10	.GASKET, MUFFLER	1					
10	18P–14718–00	.PROTECTOR, MUFFLER 1	1					
11	98902–06010	.SCREW, BIND	2					
12	90201–05015	.WASHER, PLATE	4					
13	92902–06200	.WASHER	2					
14	5BE–14788–00	BAND, SILENCER	1					
15	90105–08129	BOLT, FLANGE	2					
16	90201–08048	WASHER, PLATE	2					

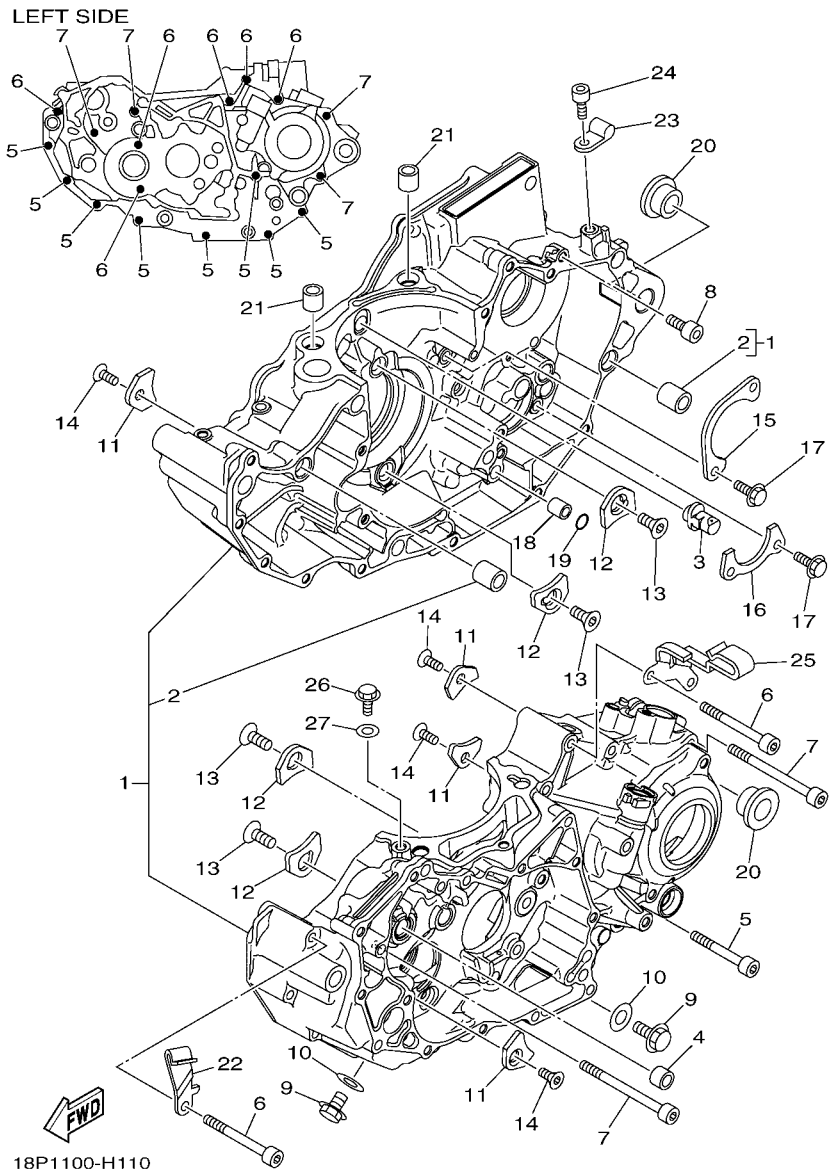

FIG. 11 CRANKCASE

REF. NO.	PART NO.	DESCRIPTION	USA					REMARKS
1	18P–15100–00	CRANKCASE ASSY	1					
2	99530–14016	.PIN, DOWEL	2					
3	2S2–15155–10	NOZZLE 3	1					
4	90380–10002	BUSH, SOLID	1					
5	91312–06050	BOLT	8					
6	91312–06060	BOLT	6					
7	91312–06080	BOLT	4					
8	91312–06016	BOLT	1					
9	95022–10016	BOLT, FLANGE	2					
10	90430–10148	GASKET	2					
11	4JT–15381–01	PLATE, BEARING COVER	4					
12	18P–15383–00	PLATE, BEARING COVER	4					
13	90151–08003	SCREW, COUNTERSUNK	4					
14	90149–06074	SCREW	4					
15	2S2–15388–00	PLATE, BEARING COVER	1					
16	2S2–18562–00	PLATE, STOPPER 2	1					
17	90105–06081	BOLT, FLANGE	4					
18	99530–10114	PIN, DOWEL	1					
19	93210–10197	O-RING	1					
20	90387–164N2	COLLAR	2					
21	99530–14016	PIN, DOWEL	2					
22	90462–10056	CLAMP	1					
23	90461–10135	CLAMP	1					
24	91312–06016	BOLT	1					
25	18P–15378–00	HOLDER	1					
26	95022–06012	BOLT, FLANGE	1					
27	90430–06014	GASKET	1					

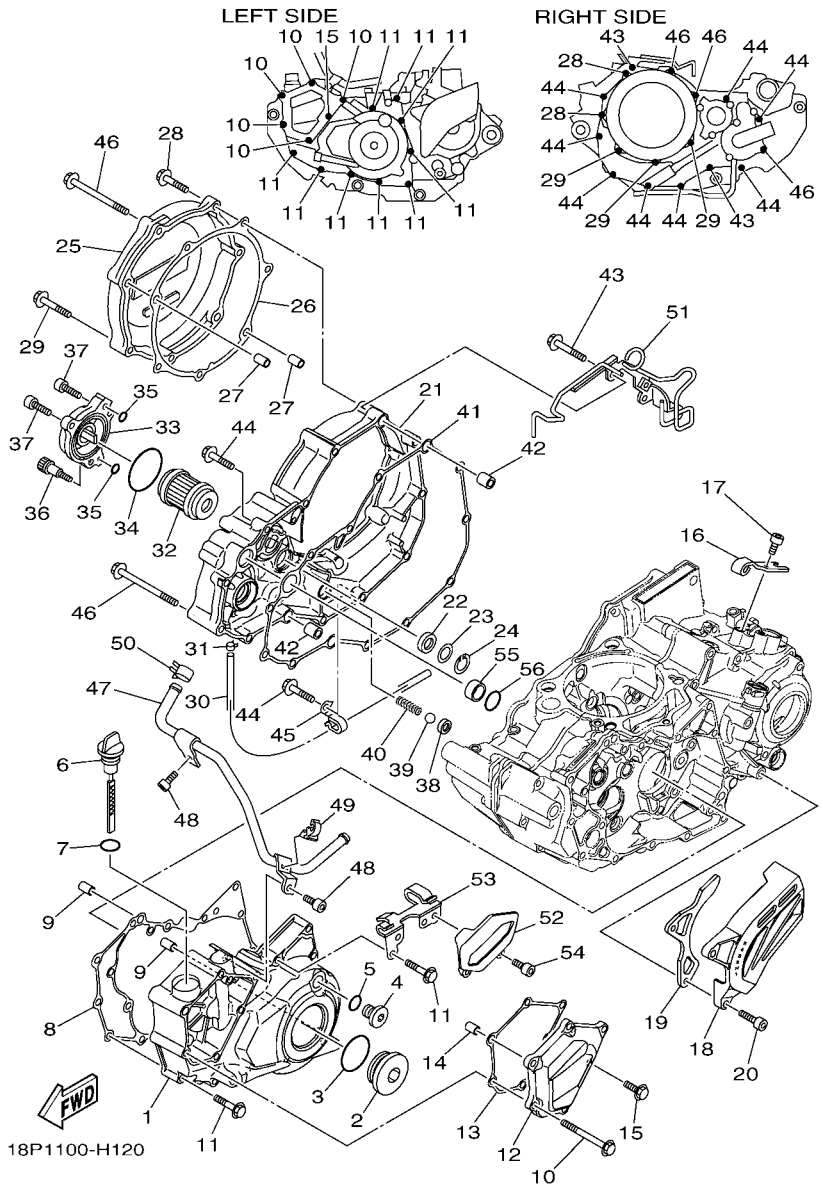

FIG. 12 CRANKCASE COVER 1

REF. NO.	PART NO.	DESCRIPTION	USA					REMARKS
1	18P–15411–00	COVER, CRANKCASE 1	1					
2	90340–36001	PLUG, STRAIGHT SCREW	1					
3	93210–357A3	O-RING	1					
4	90340–14003	PLUG, STRAIGHT SCREW	1					
5	93210–14369	O-RING	1					
6	18P–15362–00	PLUG, OIL LEVEL	1					
7	93210–19026	O-RING	1					
8	18P–15451–00	GASKET, CRANKCASE COVER 1	1					
9	99530–08016	PIN, DOWEL	2					
10	95022–06065	BOLT, FLANGE	5					
11	95022–06035	BOLT, FLANGE	9					
12	18P–15423–00	COVER 2	1					
13	18P–15463–00	GASKET, COVER PINION 2	1					
14	99530–08012	PIN, DOWEL	1					
15	95022–06020	BOLT, FLANGE	1					
16	5TA–15441–01	HOLDER, CLUTCH CABLE	1					
17	91312–06016	BOLT	1					
18	18P–15421–00	COVER, CRANKCASE 2	1					
19	18P–17466–00	GUIDE, CHAIN	1					
20	91312–06025	BOLT	2					
21	18P–15431–00	COVER, CRANKCASE 3	1					
22	93101–14164	OIL SEAL	1					
23	90201–15701	WASHER, PLATE (T=1.0)	1					
24	99009–22500	CIRCLIP	1					
25	5TG–15415–00	COVER, GENERATOR	1					
26	18P–15453–00	GASKET	1					
27	99530–08016	PIN, DOWEL	2					

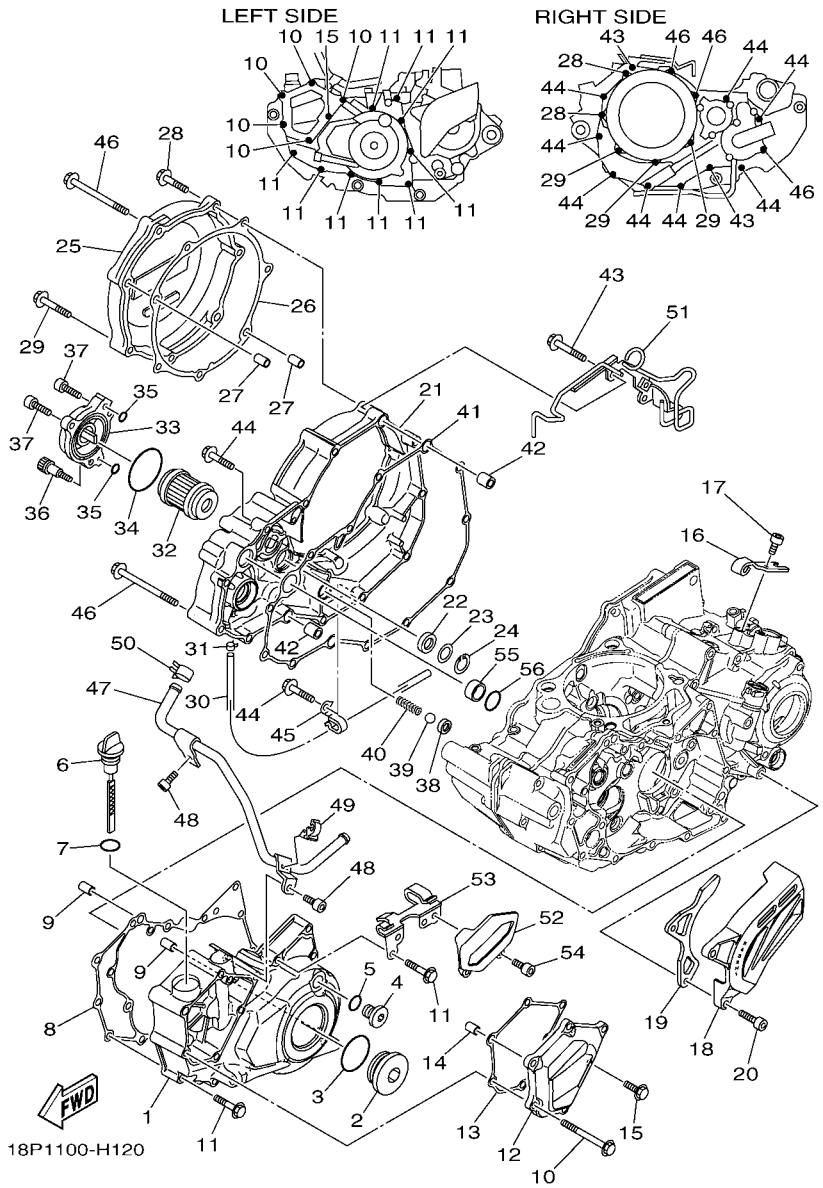

FIG. 12 CRANKCASE COVER 1

REF. NO.	PART NO.	DESCRIPTION	USA					REMARKS
28	95022–06030	BOLT, FLANGE	2					
29	95022–06040	BOLT, FLANGE	3					
30	90445–07340	HOSE (L310)	1					
31	90467–070A0	CLIP	1					
32	5D3–13440–00	ELEMENT ASSY, OIL CLEANER	1					
33	5BE–13447–10	COVER, OIL ELEMENT	1					
34	93210–47675	O-RING	1					
35	93210–07135	O-RING	3					
36	90110–06228	BOLT, HEXAGON SOCKET HEAD	1					
37	91312–06020	BOLT	2					
38	583–13113–00	SEAT, CHECK BALL	1					
39	93503–08007	BALL	1					
40	90501–043E0	SPRING, COMPRESSION	1					
41	18P–15462–00	GASKET, CRANKCASE COVER 3	1					
42	99530–10120	PIN, DOWEL	2					
43	95022–06040	BOLT, FLANGE	2					
44	95022–06030	BOLT, FLANGE	8					
45	90465–08127	CLAMP	1					
46	95022–06080	BOLT, FLANGE	3					
47	18P–15393–00	PIPE, BREATHER 2	1					
48	91312–06016	BOLT	2					
49	90464–08051	CLAMP	1					
50	90467–140A6	CLIP	1					
51	18P–15484–00	CLAMP 2	1					
52	18P–15413–00	COVER	1					
53	18P–1541A–00	STAY,CRANKCASECOVER 1	1					
54	91312–06016	BOLT	2					

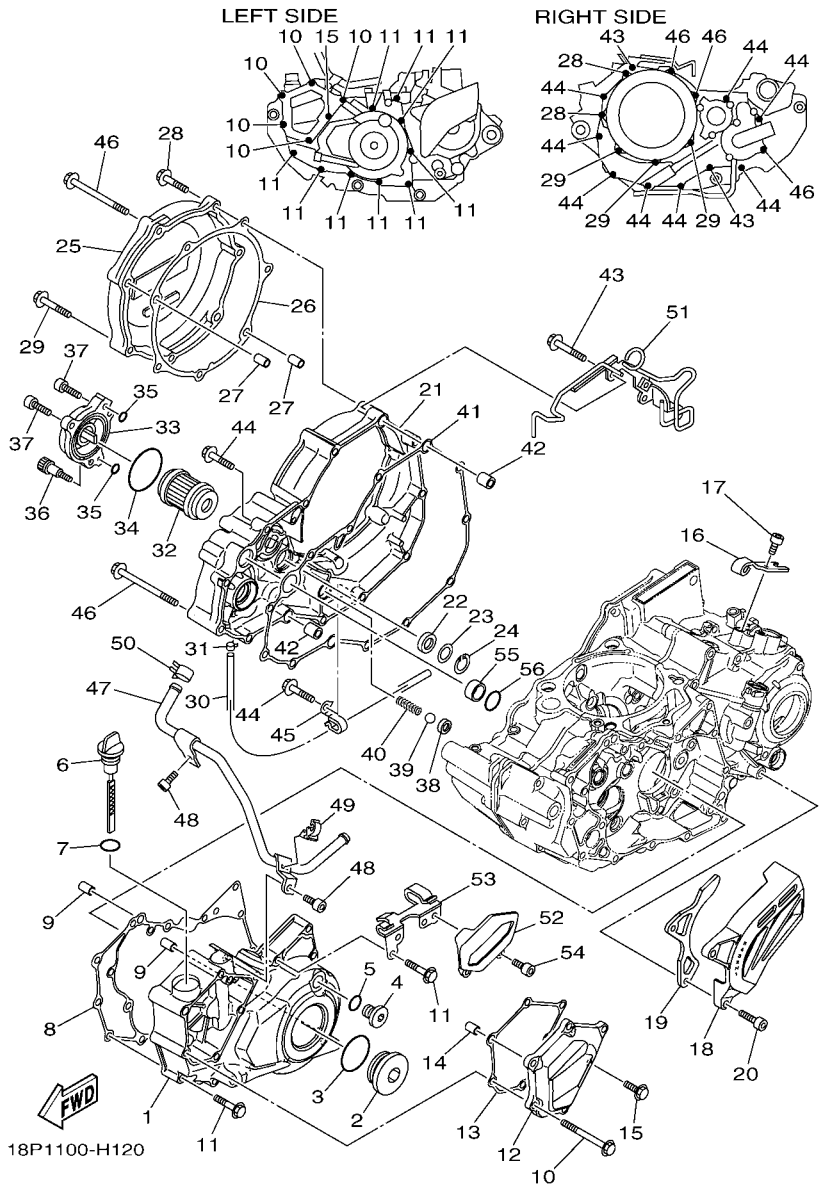

FIG. 12 CRANKCASE COVER 1

REF. NO.	PART NO.	DESCRIPTION	USA					REMARKS
55	5BE–12564–00	PIPE, WATER	1					
56	93210–19758	O-RING	1					

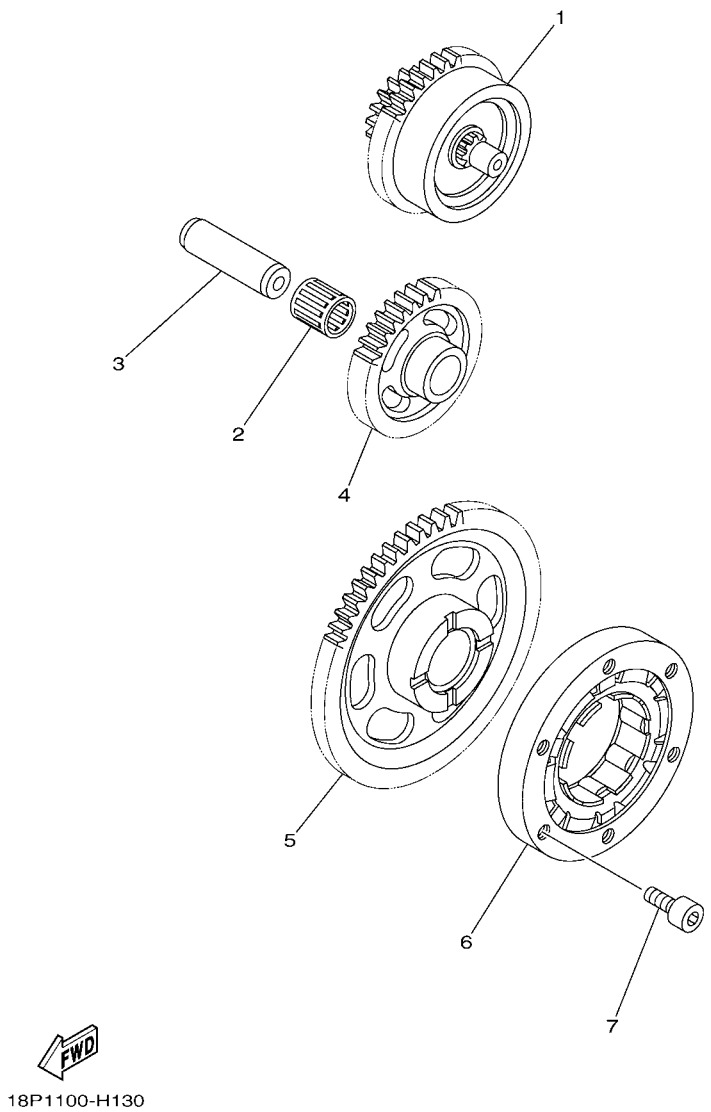

FIG. 13 STARTER

REF. NO.	PART NO.	DESCRIPTION	USA					REMARKS
1	18P–15560–00	DAMPER ASSY	1					
2	93310–11268	BEARING	1					
3	18P–15521–00	SHAFT 1	1					
4	18P–15517–00	GEAR, IDLER 2	1					
5	18P–15515–00	GEAR 3	1					
6	5TJ–15590–00	STARTER ONE-WAY ASSY	1					
7	90110–06168	BOLT, HEXAGON SOCKET HEAD	6					

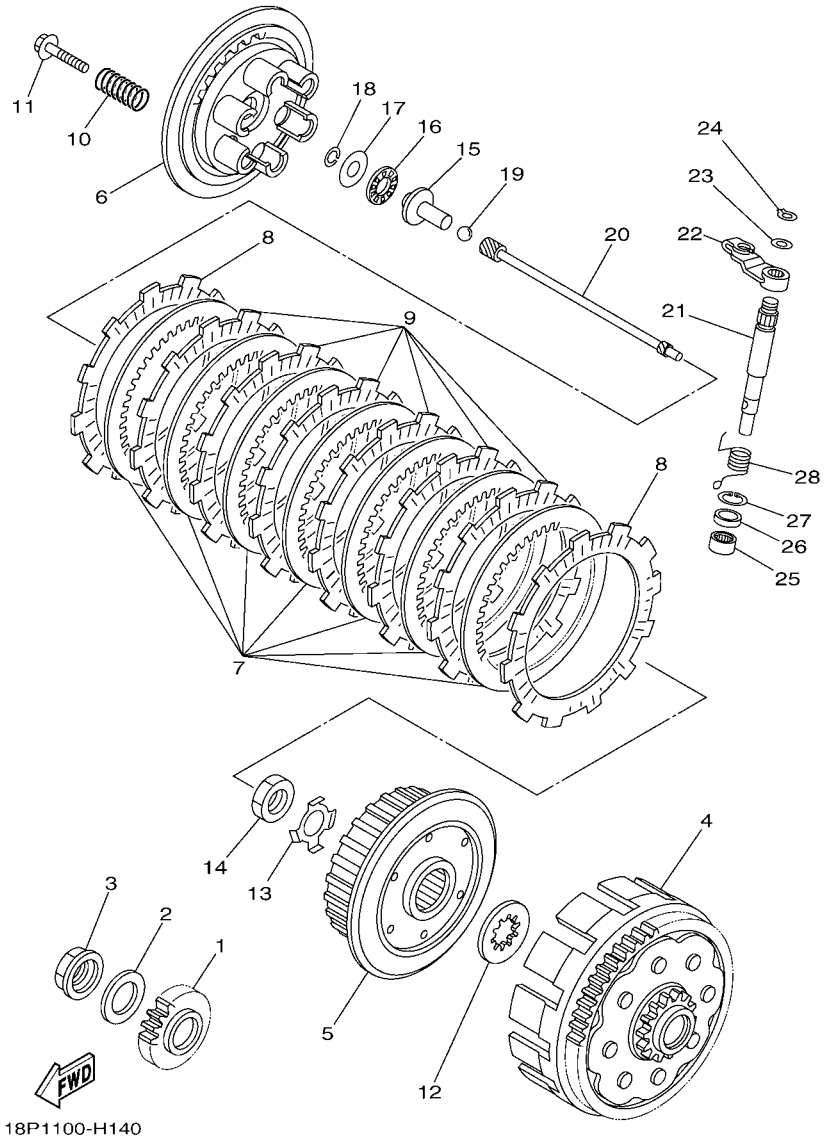

FIG. 14 CLUTCH

REF. NO.	PART NO.	DESCRIPTION	USA					REMARKS
1	2S2–16111–60	GEAR, PRIMARY DRIVE	1					
2	90208–25045	WASHER, CONICAL SPRING	1					
3	90179–20009	NUT	1					
4	18P–16150–00	PRIMARY DRIVEN GEAR COMP.	1					
5	5TA–16371–10	BOSS, CLUTCH	1					
6	2S2–16351–00	PLATE, PRESSURE 1	1					
7	4X7–16325–00	PLATE, CLUTCH 2	7					
8	5TA–16321–00	PLATE, FRICTION	2					
9	5VY–16321–00	PLATE, FRICTION	6					
10	90501–231E9	SPRING, COMPRESSION	6					
11	90159–06010	SCREW, WITH WASHER	6					
12	5XD–16154–00	PLATE, THRUST 1	1					
13	90215–20005	WASHER, LOCK	1					
14	90170–20327	NUT	1					
15	5TG–16356–00	ROD, PUSH 1	1					
16	93340–21505	BEARING	1					
17	90201–125L6	WASHER, PLATE	1					
18	93440–10085	CIRCLIP	1					
19	93515–32029	BALL	1					
20	18P–16357–00	ROD, PUSH 2	1					
21	18P–16382–00	AXLE, PUSH LEVER	1					
22	18P–16342–00	LEVER, PUSH	1					
23	90201–10032	WASHER, PLATE	1					
24	99009–10400	CIRCLIP	1					
25	93317–11287	BEARING	1					
26	93102–12224	OIL SEAL	1					
27	99009–20500	CIRCLIP	1					

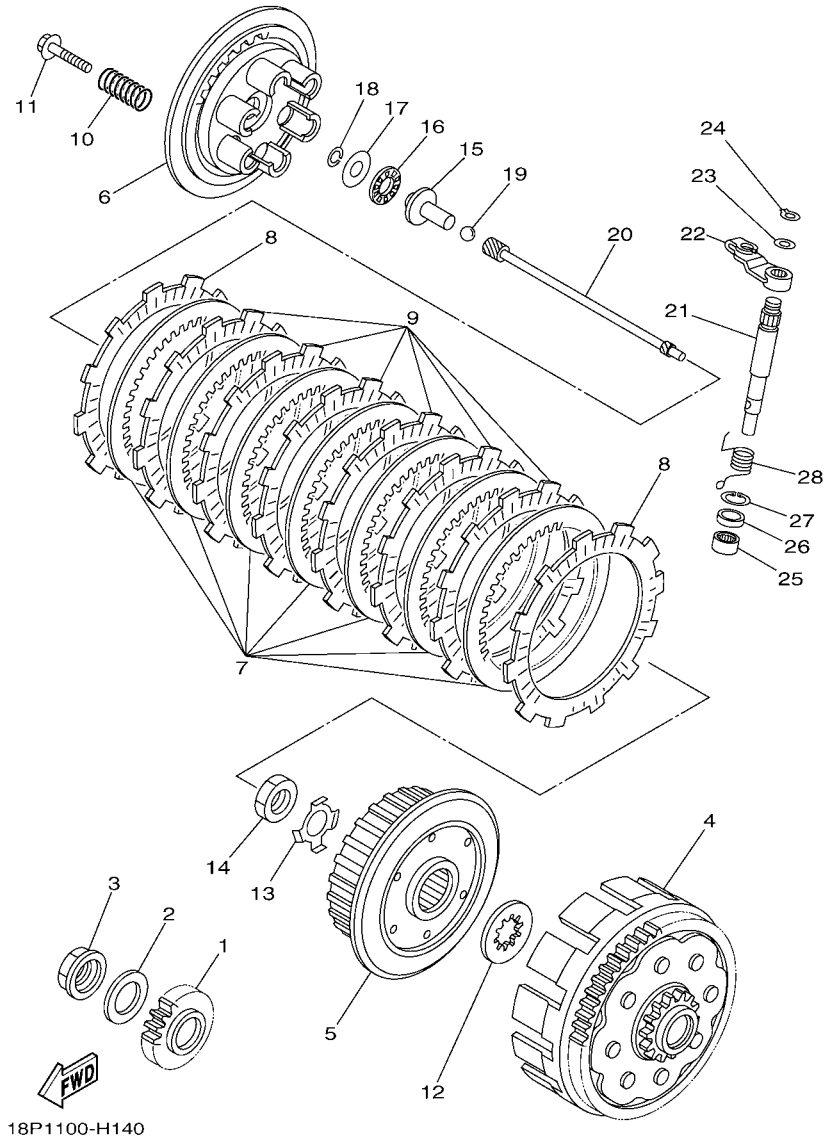

FIG. 14 CLUTCH

REF. NO.	PART NO.	DESCRIPTION	USA					REMARKS
28	90508–16061	SPRING, TORSION	1					

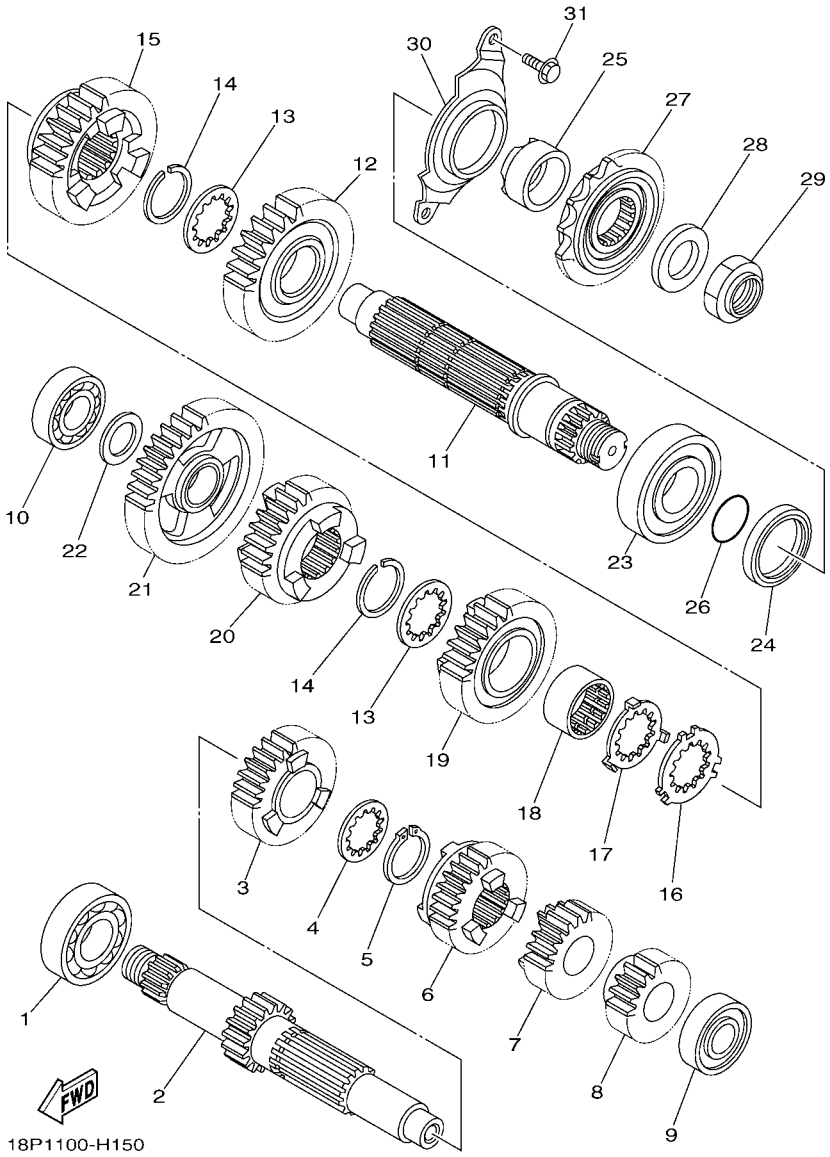

FIG. 15 TRANSMISSION

REF. NO.	PART NO.	DESCRIPTION	USA					REMARKS
1	93306–20532	BEARING	1					
2	18P–17411–00	AXLE, MAIN	1					
3	18P–17151–00	GEAR, 5TH PINION (21T)	1					
4	90209–23012	WASHER	1					
5	93410–26067	CIRCLIP	1					
6	18P–17141–00	GEAR, 4TH PINION (21T)	1					
7	18P–17131–00	GEAR, 3RD PINION (19T)	1					
8	18P–17121–00	GEAR, 2ND PINION (15T)	1					
9	93306–20332	BEARING	1					
10	93306–00426	BEARING	1					
11	18P–17402–00	DRIVE AXLE ASSY	1					
12	18P–17221–00	GEAR, 2ND WHEEL (30T)	1					
13	90209–26008	WASHER	2					
14	93440–28062	CIRCLIP	2					
15	18P–17231–00	GEAR, 3RD WHEEL (31T)	1					
16	90214–26002	WASHER, CLAW	1					
17	90214–26003	WASHER, CLAW	1					
18	90387–26005	COLLAR	1					
19	18P–17241–00	GEAR, 4TH WHEEL (28T)	1					
20	18P–17251–00	GEAR, 5TH WHEEL (23T)	1					
21	18P–17211–00	GEAR, 1ST WHEEL (35T)	1					
22	90201–20276	WASHER, PLATE (T=1.0)	1					
23	93306–27803	BEARING	1					
24	93102–35393	OIL SEAL	1					
25	90387–28009	COLLAR	1					
26	93210–25001	O-RING	1					
27	18P–17460–00	SPROCKET, DRIVE (14T)	1					

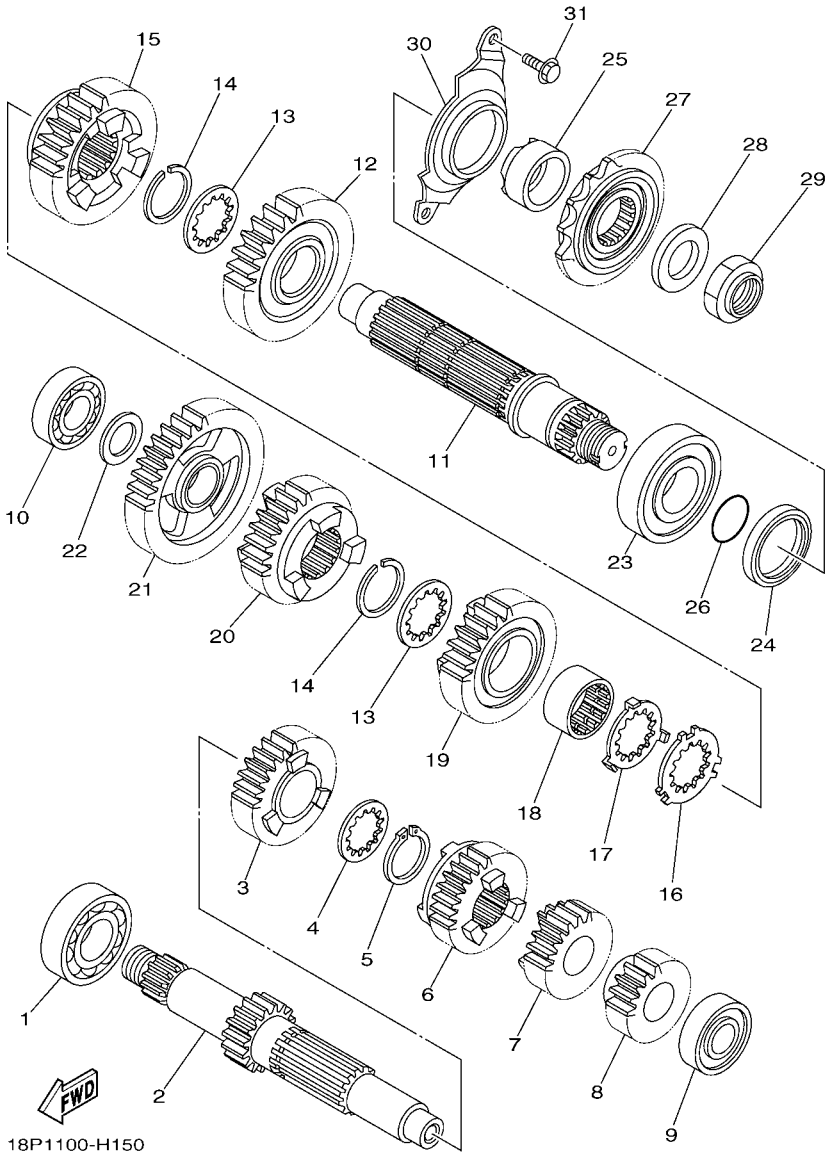

FIG. 15 TRANSMISSION

REF. NO.	PART NO.	DESCRIPTION	USA					REMARKS
28	90201–22015	WASHER, PLATE	1					
29	90179–22018	NUT	1					
30	1S3–17471–00	PLATE, COVER	1					
31	95022–06014	BOLT, FLANGE	2					

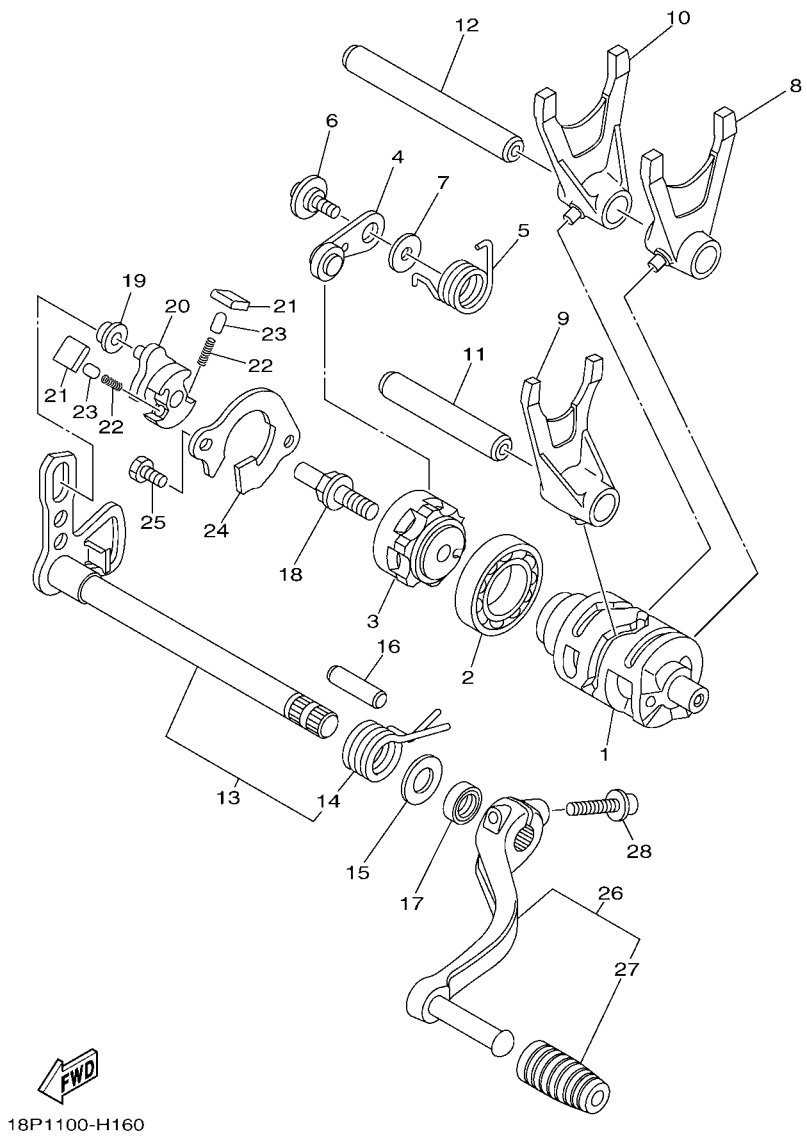

FIG. 16 SHIFT CAM & FORK

REF. NO.	PART NO.	DESCRIPTION	USA					REMARKS
1	18P–18541–00	CAM, SHIFT	1					
2	93306–90509	BEARING	1					
3	2S2–18185–00	SEGMENT	1					
4	2S2–18140–10	STOPPER LEVER ASSY	1					
5	90508–26021	SPRING, TORSION	1					
6	90109–06198	BOLT	1					
7	90201–06013	WASHER, PLATE	1					
8	18P–18511–00	FORK, SHIFT 1	1					
9	18P–18512–00	FORK, SHIFT 2	1					
10	18P–18513–00	FORK, SHIFT 3	1					
11	18P–18531–00	BAR, SHIFT FORK GUIDE 1	1					
12	1WG–18531–01	BAR, SHIFT FORK GUIDE 1	1					
13	18P–18101–00	SHIFT SHAFT ASSY	1					
14	90508–32136	.SPRING, TORSION	1					
15	90201–127E1	WASHER, PLATE	1					
16	93608–30002	PIN, DOWEL	1					
17	93102–12224	OIL SEAL	1					
18	3XJ–18173–10	PIN, SHIFT	1					
19	3XJ–18178–00	ROLLER, SHIFT LEVER	1					
20	18P–18122–00	LEVER, SHIFT 2	1					
21	3XJ–18182–00	PAWL, SHIFTER	2					
22	90501–052G5	SPRING, COMPRESSION	2					
23	3XJ–18184–00	PIN, PAWL	2					
24	5BE–18172–00	GUIDE, SHIFT	1					
25	90101–06041	BOLT	2					
26	18P–18110–00	SHIFT PEDAL ASSY	1					
27	5YT–18113–00	.COVER, SHIFT PEDAL	1					

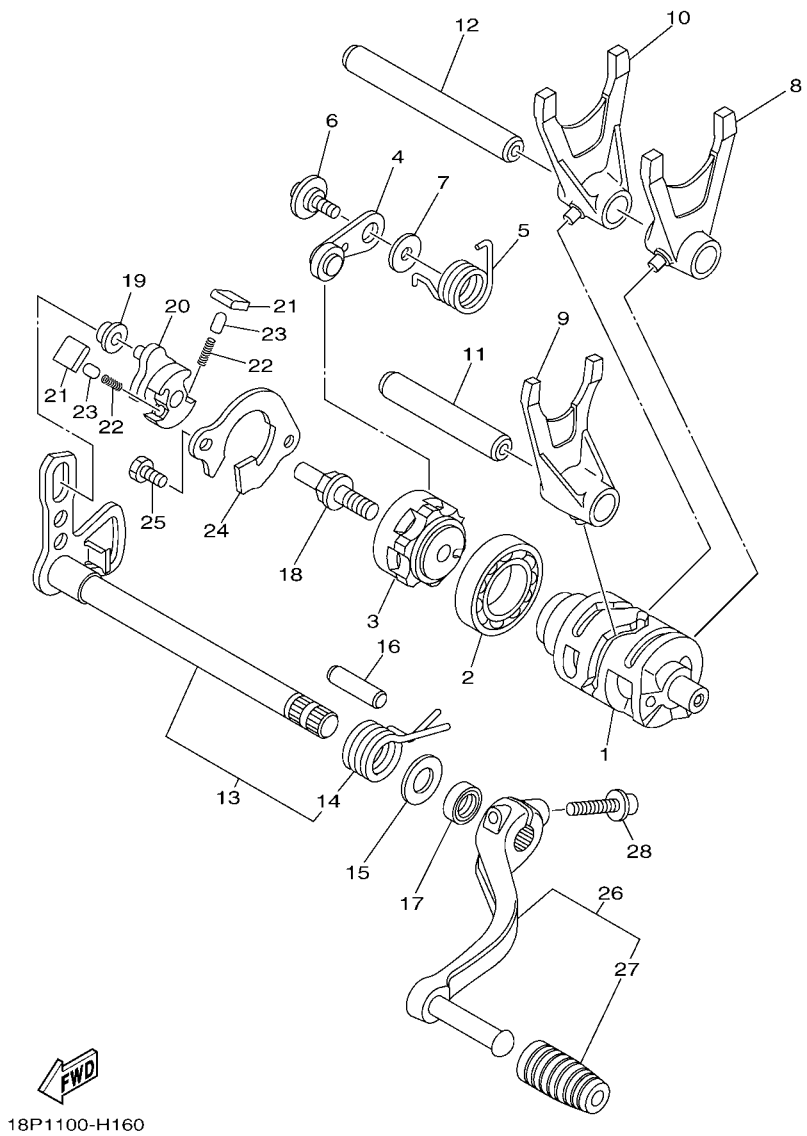

FIG. 16 SHIFT CAM & FORK

REF. NO.	PART NO.	DESCRIPTION	USA					REMARKS
28	90109–06031	BOLT	1					

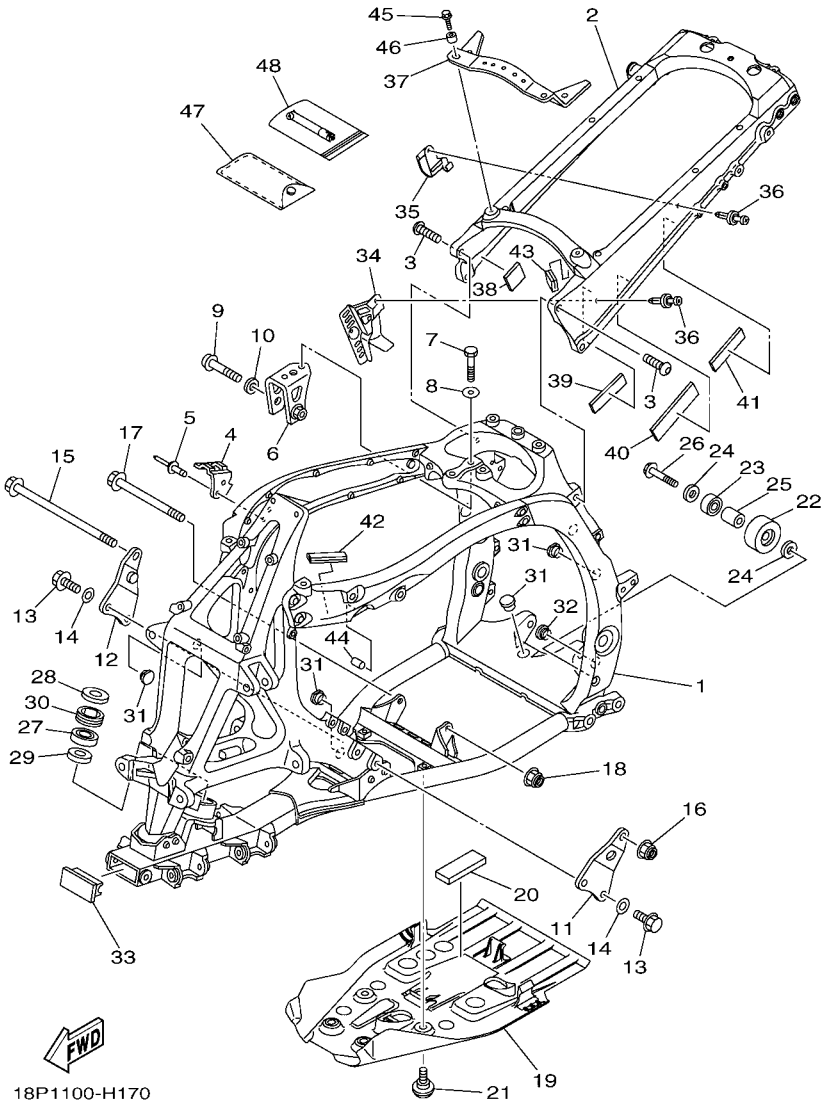

FIG. 17 FRAME

REF. NO.	PART NO.	DESCRIPTION	USA					REMARKS
1	18P–21101–09	FRONT FRAME COMP.	1					UR FOR DPBSE
	18P–21101–19	FRONT FRAME COMP.	1					UR FOR BWS1
2	18P–21190–09	REAR FRAME COMP.	1					UR FOR DPBSE
	18P–21190–19	REAR FRAME COMP.	1					UR FOR BWS1
3	90149–10034	SCREW	4					
4	18P–2133H–00	BRKT., BRAKE PIPE 1	1					
5	90267–48176	RIVET, BLIND (4.8X17 YELLOW)	2					
6	18P–21315–00	STAY, ENGINE 1	1					
7	97012–08035	BOLT	2					
8	90201–08053	WASHER, PLATE	2					
9	90110–10029	BOLT, HEXAGON SOCKET HEAD	1					
10	90201–10036	WASHER, PLATE	1					
11	18P–21316–00	STAY, ENGINE 2	1					
12	18P–21317–00	STAY, ENGINE 3	1					
13	95812–10030	BOLT, FLANGE	4					
14	90201–10043	WASHER, PLATE	4					
15	90105–10350	BOLT, FLANGE	1					
16	90185–10011	NUT, SELF-LOCKING	1					
17	90105–10148	BOLT, FLANGE	1					
18	90185–10011	NUT, SELF-LOCKING	1					
19	18P–21471–00	PROTECTOR, ENGINE	1					
20	41R–21717–00	DAMPER	1					
21	90109–06198	BOLT	4					
22	5TG–22178–00	TENSIONER	1					
23	93300–60804	BEARING	1					
24	90201–08043	WASHER, PLATE	2					
25	90387–086N4	COLLAR	1					

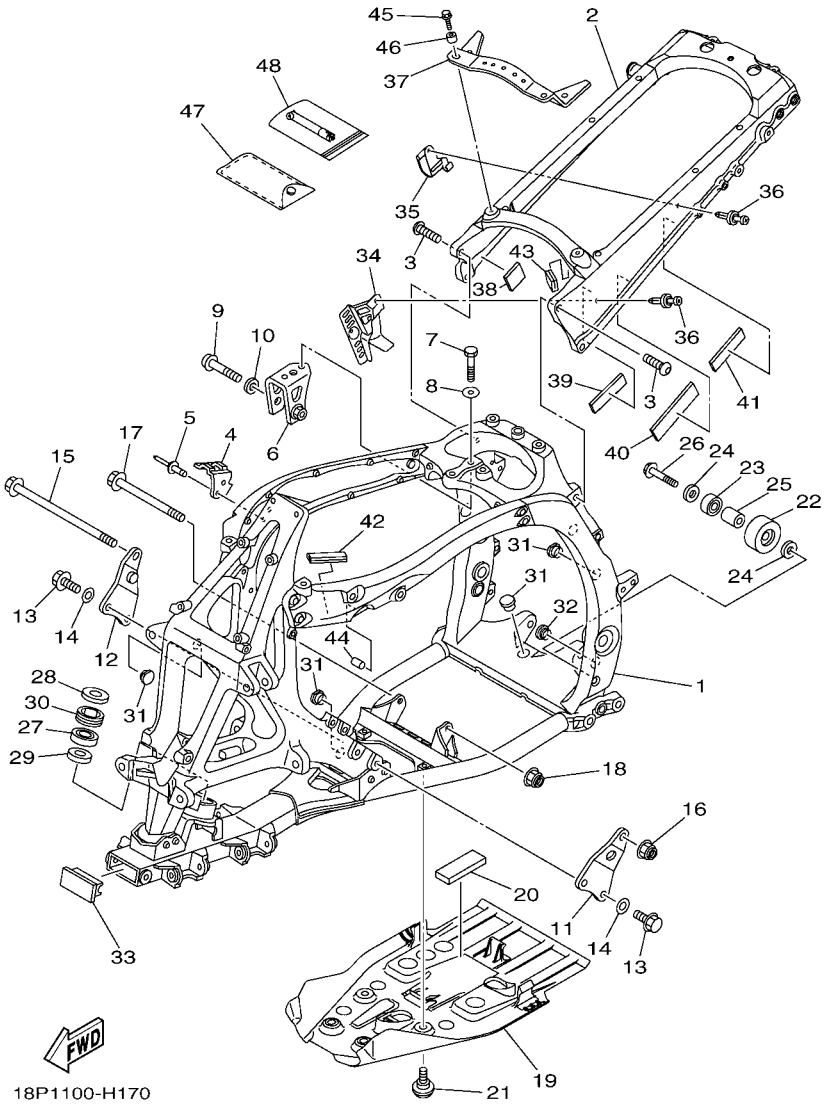

FIG. 17 FRAME

REF. NO.	PART NO.	DESCRIPTION	USA					REMARKS
26	90105–08112	BOLT, FLANGE	1					
27	93306–20352	BEARING	1					
28	93102–25081	OIL SEAL	1					
29	93102–25099	OIL SEAL	1					
30	5GT–23872–00	HOLDER, BEARING	1					
31	90338–20183	PLUG	10					
32	90338–16007	PLUG	1					
33	18P–2111A–00	CAP, MAIN PIPE	1					
34	18P–21335–00	CLAMP, WIRE HARNESS 1	1					
35	18P–21336–00	CLAMP, WIRE HARNESS 2	1					
36	90269–05001	RIVET	2					
37	18P–21131–00	REINF., SEAT RAIL	1					
38	3KJ–24723–00	DAMPER, SEAT	1					
39	4XY–21638–00	DAMPER 1	1					
40	2S2–2177M–00	DAMPER, LOCATING 3	1					
41	1C3–2214F–00	DAMPER 1	1					
42	4XY–28347–00	MOLE 3	1					
43	3YX–2171L–00	MOLE, SIDE COVER 1	1					
44	90445–11418	HOSE (L18)	1					
45	90105–06084	BOLT, FLANGE	2					
46	90387–06197	COLLAR	2					
47	18P–28100–00	TOOL KIT	1					
48	1NV–2811A–01	GAUGE, AIR	1					

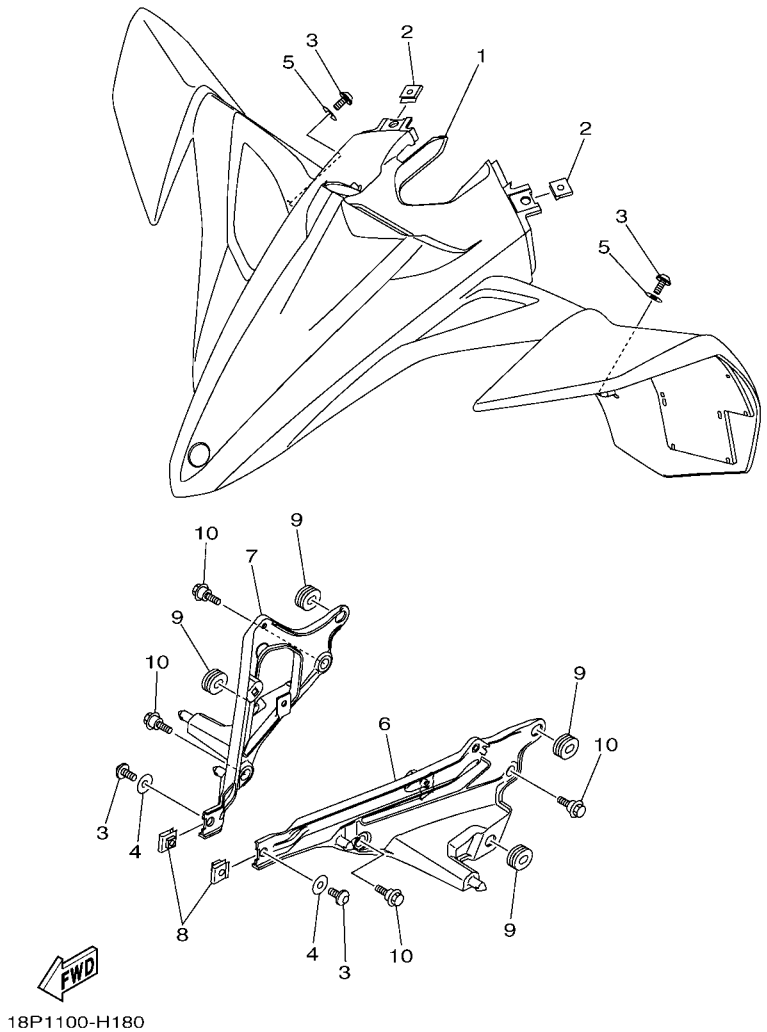

FIG. 18 FRONT FENDER

REF. NO.	PART NO.	DESCRIPTION	USA					REMARKS
1	18P–W2151–00	FRONT FENDER COMP.	1					UR FOR DPBSE
	18P–W2151–10	FRONT FENDER COMP.	1					UR FOR BWS1
2	90183–061A5	NUT, SPRING	2					
3	90111–06038	BOLT,HEX. SOCKET BUTTON	4					
4	90201–06033	WASHER, PLATE	2					
5	90201–06085	WASHER, PLATE	2					
6	18P–21513–00	STAY, FENDER 1	1					
7	18P–21514–00	STAY, FENDER 2	1					
8	90183–061A5	NUT, SPRING	2					
9	90480–01559	GROMMET	4					
10	90109–06199	BOLT	4					

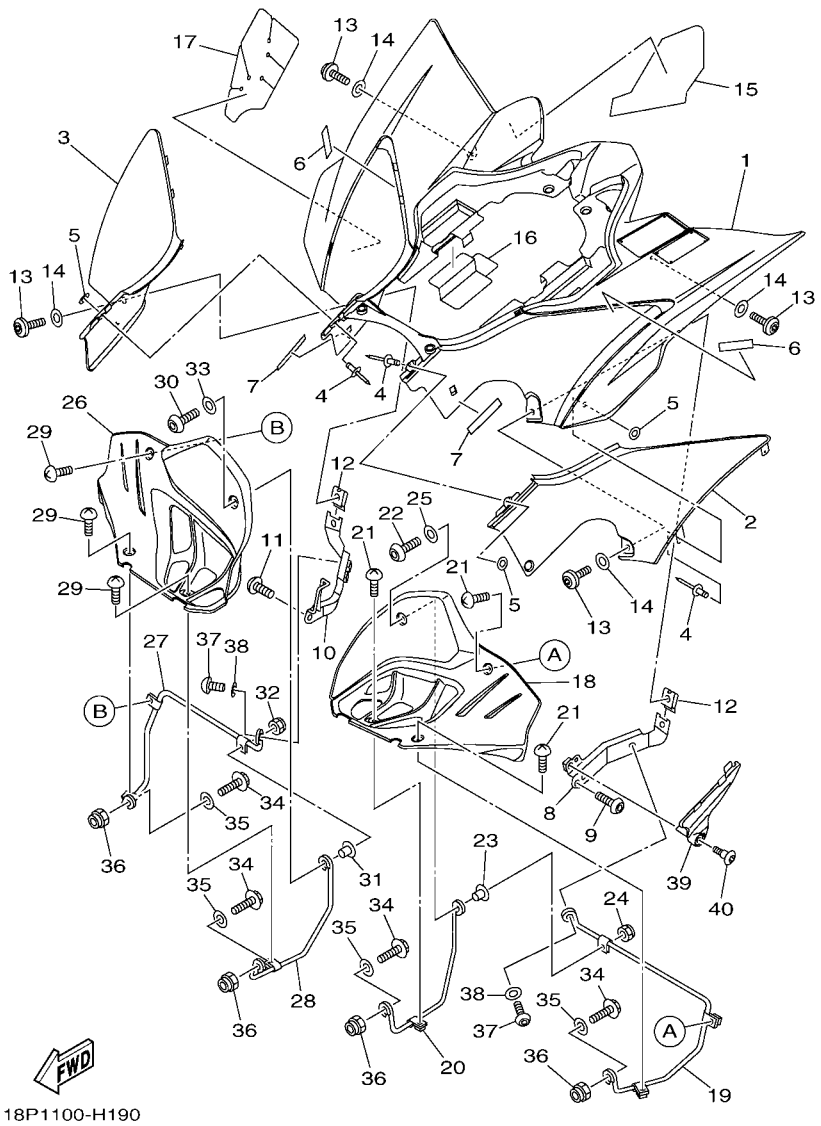

FIG. 19 REAR FENDER

REF. NO.	PART NO.	DESCRIPTION	USA					REMARKS
1	18P–W2161–00	REAR FENDER COMP.	1					UR FOR DPBSE
	18P–W2161–10	REAR FENDER COMP.	1					UR FOR BWS1
2	18P–2476U–00	PROTECTOR,1	1					
3	18P–2476V–00	PROTECTOR,2	1					
4	90267–32004	RIVET, BLIND	6					
5	90201–03008	WASHER, PLATE	6					
6	18P–2173U–00	TAPE 2	2					
7	18P–2173T–00	TAPE 1	2					
8	18P–21643–00	STAY, FENDER 3	1					
9	92012–08016	BOLT, BUTTON HEAD	2					
10	18P–21644–00	STAY, FENDER 4	1					
11	92012–08016	BOLT, BUTTON HEAD	1					
12	90183–061A5	NUT, SPRING	2					
13	90111–06038	BOLT,HEX. SOCKET BUTTON	4					
14	90201–06085	WASHER, PLATE	4					
15	18P–21652–00	PROTECTOR	1					
16	18P–2163E–00	COVER, 2	1					
17	18P–2163F–00	COVER, 3	1					
18	18P–21621–00	FLAP	1					
19	18P–2164F–00	STAY 1	1					
20	18P–2164H–00	STAY 3	1					
21	90154–05013	SCREW, BINDING	3					
22	92012–06030	BOLT, BUTTON HEAD	1					
23	90387–06205	COLLAR	1					
24	95602–06200	NUT, SELF-LOCKING	1					
25	90201–06076	WASHER, PLATE	1					
26	18P–21691–00	FLAP	1					

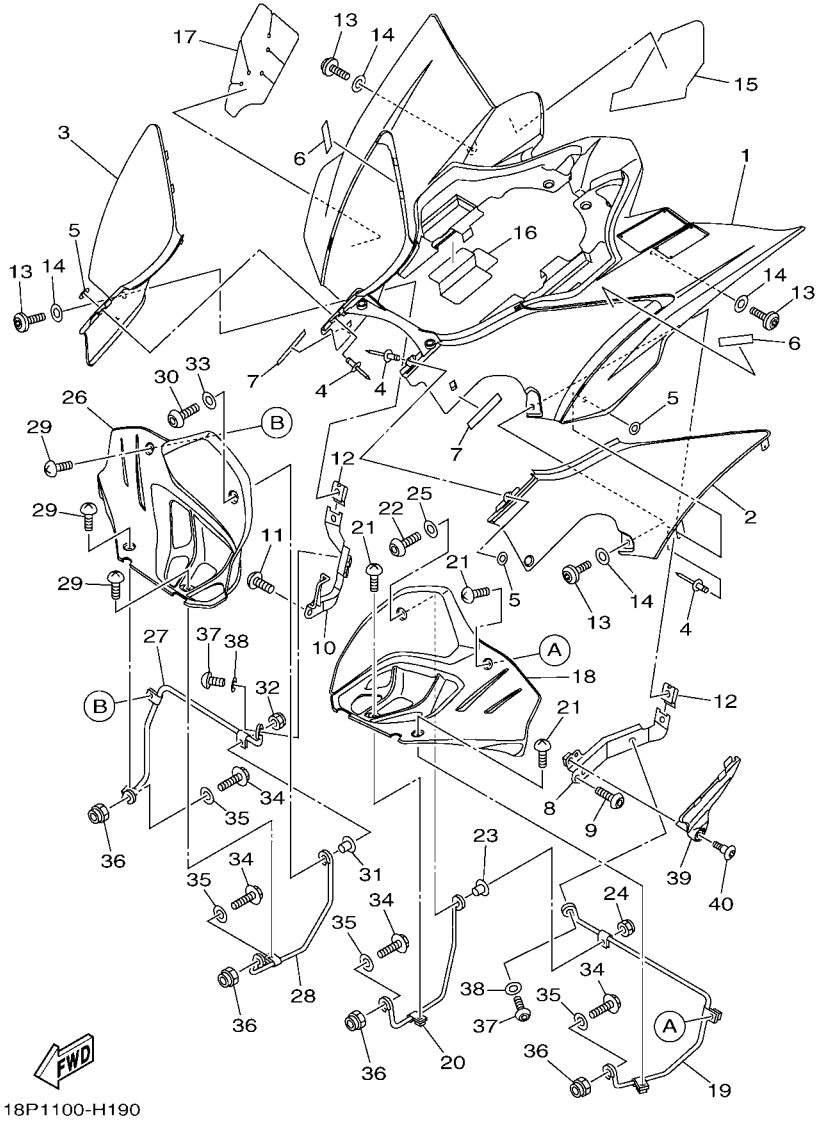

FIG. 19 REAR FENDER

REF. NO.	PART NO.	DESCRIPTION	USA					REMARKS
27	18P–2164G–00	STAY 2	1					
28	18P–2164J–00	STAY 4	1					
29	90154–05013	SCREW, BINDING	3					
30	92012–06030	BOLT, BUTTON HEAD	1					
31	90387–06205	COLLAR	1					
32	95602–06200	NUT, SELF-LOCKING	1					
33	90201–06076	WASHER, PLATE	1					
34	95822–08025	BOLT, FLANGE	4					
35	90201–08048	WASHER, PLATE	4					
36	95602–08200	NUT, SELF-LOCKING	4					
37	92012–08020	BOLT, BUTTON HEAD	2					
38	90201–08043	WASHER, PLATE	2					
39	18P–2163A–00	COVER, REAR FENDER 1	1					
40	90109–06249	BOLT	1					

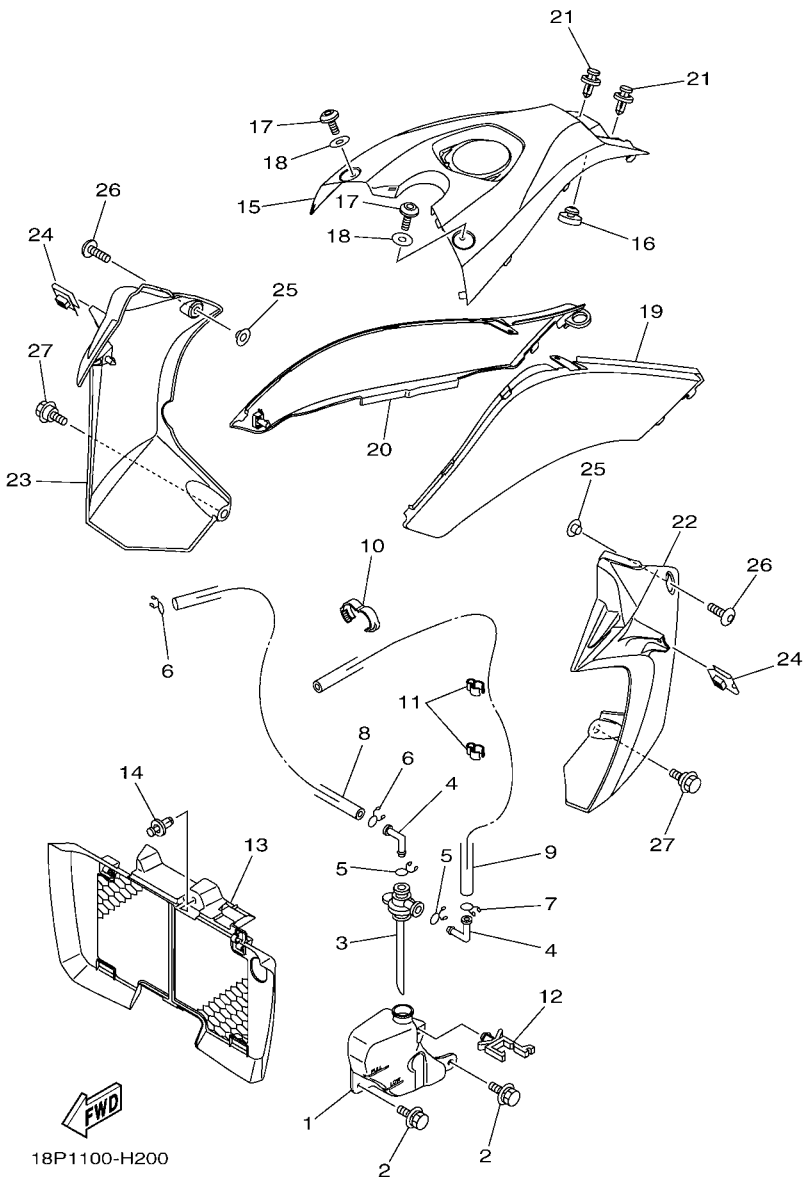

FIG. 20 SIDE COVER

REF. NO.	PART NO.	DESCRIPTION	USA					REMARKS
1	18P–21871–00	TANK, RECOVERY	1					
2	90119–06152	BOLT, WITH WASHER	2					
3	18P–21875–00	CAP	1					
4	26H–21828–00	ELBOW	2					
5	90467–11019	CLIP	2					
6	90467–08003	CLIP	2					
7	90467–08003	CLIP	1					
8	90445–09251	HOSE (L350)	1					
9	90445–09123	HOSE (L730)	1					
10	90464–16001	CLAMP	1					
11	90464–15065	CLAMP	2					
12	90464–15M08	CLAMP	1					
13	18P–12467–00	COVER, RADIATOR	1					
14	90269–07076	RIVET	1					
15	18P–2171A–00	COVER, TOP	1					UR FOR DPBSE
	18P–2171A–10	COVER, TOP	1					UR FOR BWS1
16	22W–24741–00	PAD, SEAT	1					
17	90111–06038	BOLT,HEX. SOCKET BUTTON	2					
18	90201–06085	WASHER, PLATE	2					
19	18P–21711–00	COVER, SIDE 1	1					
20	18P–21721–00	COVER, SIDE 2	1					
21	90269–07010	RIVET	2					
22	18P–21731–10	COVER, SIDE 3	1					
23	18P–21741–10	COVER, SIDE 4	1					
24	90183–061A5	NUT, SPRING	2					
25	90387–06170	COLLAR	2					
26	90111–06084	BOLT,HEX. SOCKET BUTTON	2					

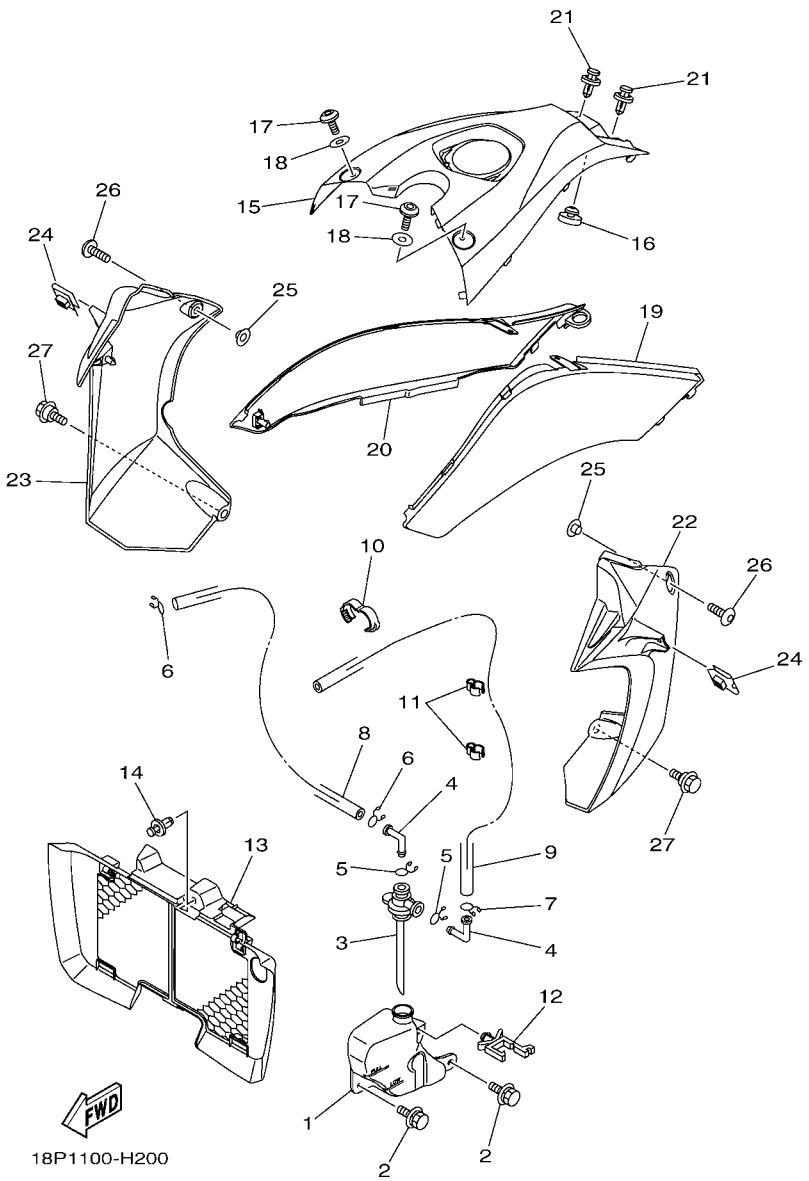

FIG. 20 SIDE COVER

REF. NO.	PART NO.	DESCRIPTION	USA					REMARKS
27	90109–06172	BOLT	2					

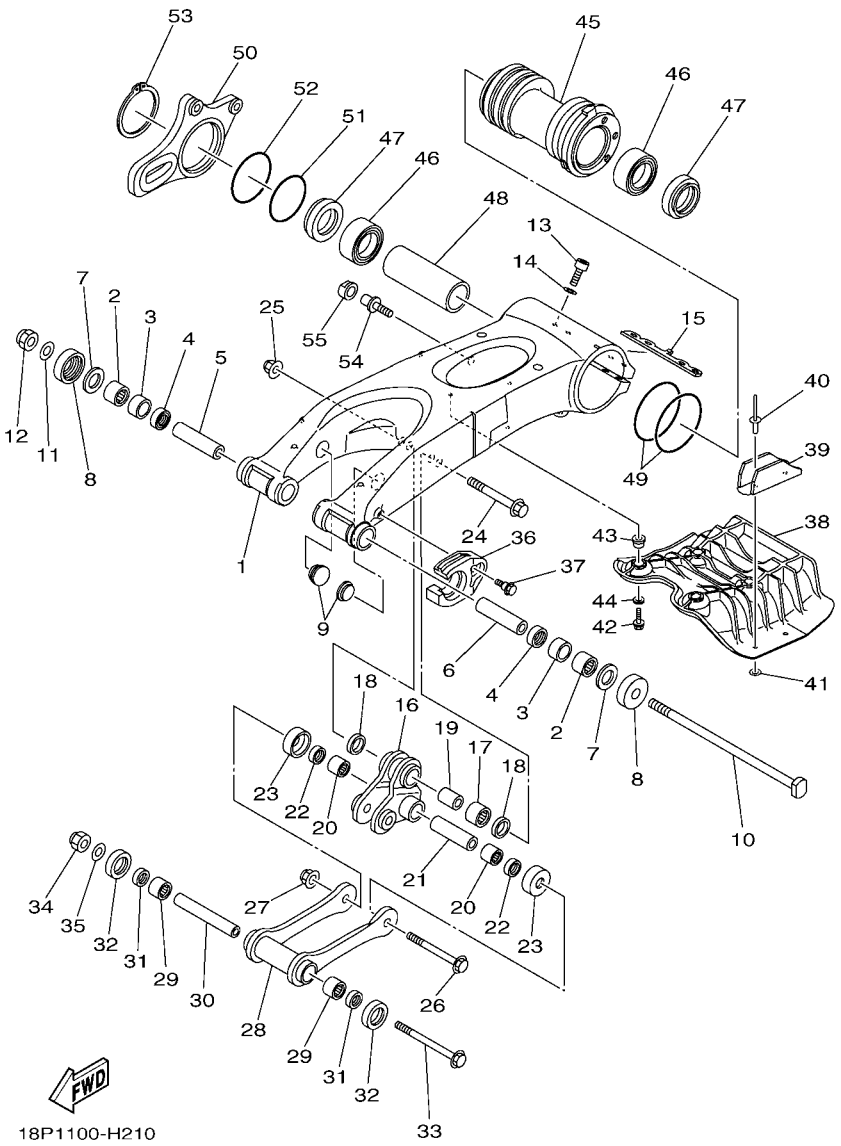

FIG. 21 REAR ARM

REF. NO.	PART NO.	DESCRIPTION	USA					REMARKS
1	18P–22110–00	REAR ARM COMP.	1					
2	93317–22237	BEARING	2					
3	90380–22111	BUSH, SOLID	2					
4	93106–22019	OIL SEAL (DC 22-28-8)	2					
5	90387–16027	COLLAR	1					
6	90387–160W1	COLLAR	1					
7	3YF–22149–00	WASHER	2					
8	4X7–22129–00	COVER, THRUST 2	2					
9	90338–23004	PLUG	2					
10	18P–22141–00	SHAFT, PIVOT	1					
11	90201–16018	WASHER, PLATE	1					
12	90185–16002	NUT, SELF-LOCKING	1					
13	91314–08040	BOLT, HEXAGON SOCKET HEAD	4					
14	92903–08600	WASHER, PLATE	4					
15	5TG–22475–00	SEAL, DUST	1					
16	18P–2217A–00	ARM, RELAY 1	1					
17	93315–32056	BEARING	1					
18	93109–20001	OIL SEAL	2					
19	90387–12043	COLLAR	1					
20	93315–31758	BEARING	2					
21	90387–12041	COLLAR	1					
22	93109–17071	OIL SEAL	2					
23	55K–22129–00	COVER, THRUST 2	2					
24	90105–12064	BOLT, FLANGE	1					
25	90185–12002	NUT, SELF-LOCKING	1					
26	90105–12065	BOLT, FLANGE	1					
27	90185–12002	NUT, SELF-LOCKING	1					

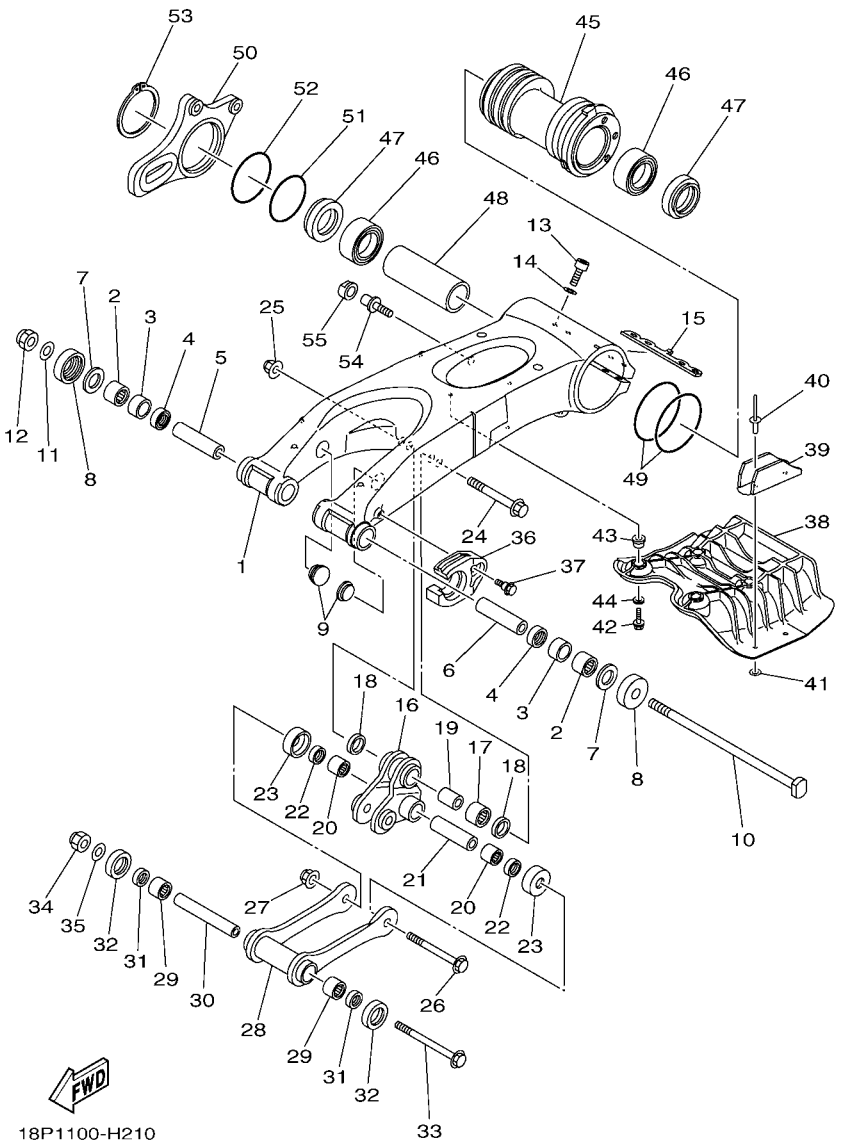

FIG. 21 REAR ARM

REF. NO.	PART NO.	DESCRIPTION	USA					REMARKS
28	18P–2217F–00	ROD, CONNECTING 1	1					
29	93315–31758	BEARING	2					
30	90387–12042	COLLAR	1					
31	93109–17071	OIL SEAL	2					
32	55K–22129–00	COVER, THRUST 2	2					
33	90105–12066	BOLT, FLANGE	1					
34	90185–12007	NUT, SELF-LOCKING	1					
35	90201–12032	WASHER, PLATE	1					
36	18P–22151–00	SEAL, GUARD	1					
37	90109–06172	BOLT	1					
38	18P–22361–00	GUARD 1	1					
39	5TG–22153–10	GUARD, CHAIN	1					
40	90267–47187	RIVET, BLIND (4.7X16.4 BLACK)	2					
41	90201–04027	WASHER, PLATE	2					
42	95812–06025	BOLT, FLANGE	4					
43	90387–06151	COLLAR	4					
44	90201–06033	WASHER, PLATE	4					
45	5TG–25311–20	HUB, REAR	1					
46	93304–20812	BEARING	2					
47	93106–48001	OIL SEAL	2					
48	5TG–25317–00	SPACER, BEARING	1					
49	1S3–23147–01	O-RING	2					
50	5TG–25721–20	BRACKET, CALIPER	1					
51	93210–71001	O-RING	1					
52	93210–66001	O-RING	1					
53	93410–67085	CIRCLIP	1					
54	90110–12001	BOLT, HEXAGON SOCKET HEAD	1					

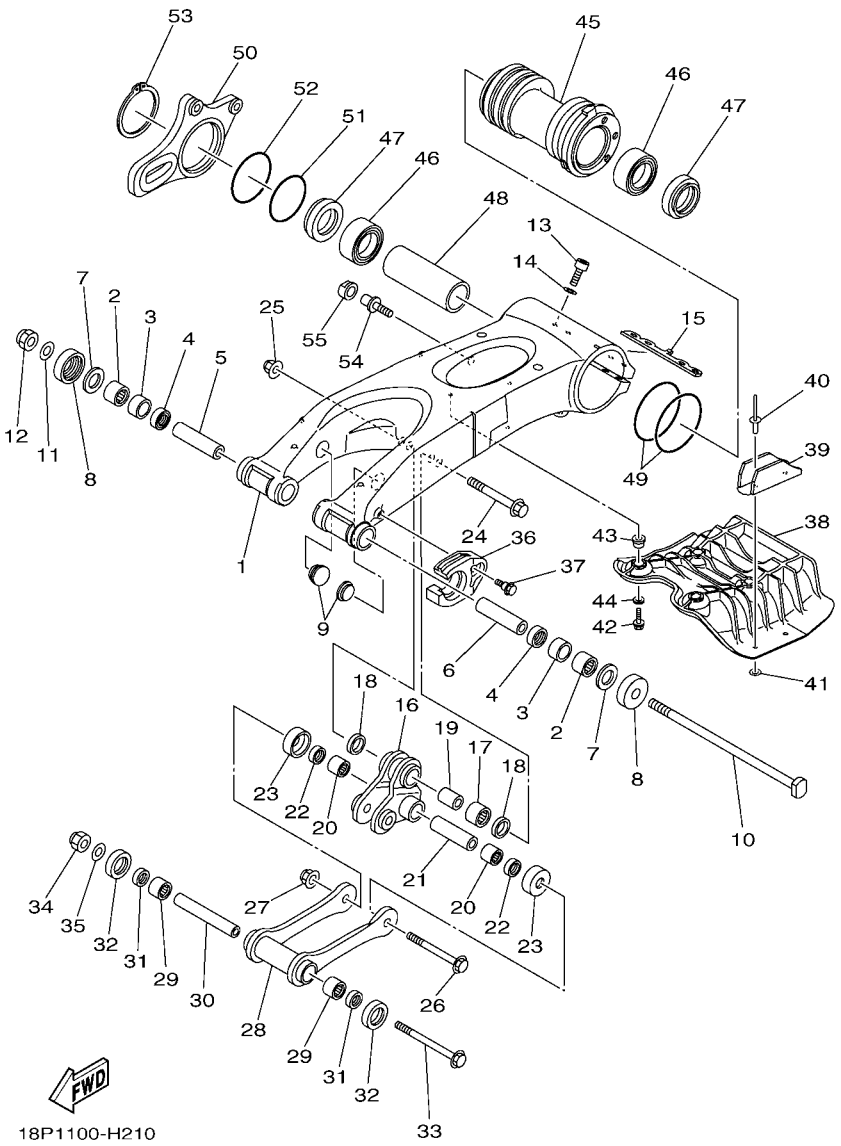

FIG. 21 REAR ARM

REF. NO.	PART NO.	DESCRIPTION	USA					REMARKS
55	90387–16014	COLLAR	1					

FIG. 22 REAR SUSPENSION

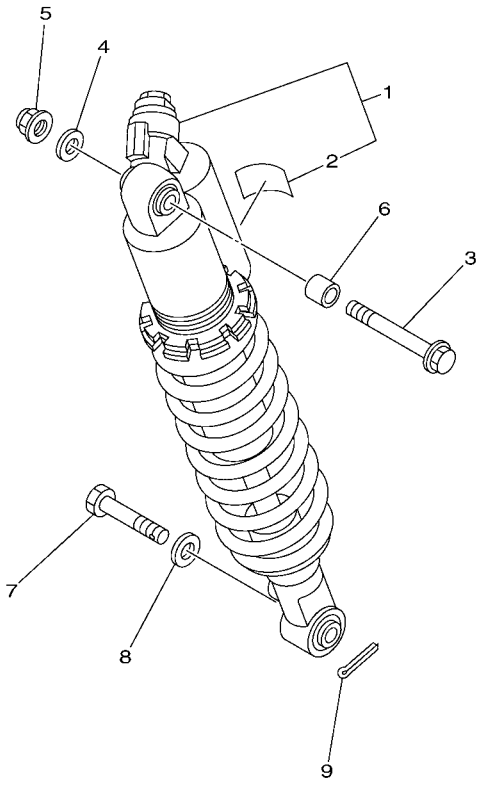

18P1100-H220

REF. NO.	PART NO.	DESCRIPTION	USA					REMARKS
1	18P–22210–00	SHOCK ABSORBER ASSY, REAR	1					
2	4AA–22259–80	.LABEL, WARNING	1					
3	90105–12038	BOLT, FLANGE	1					
4	90201–12032	WASHER, PLATE	1					
5	90185–12002	NUT, SELF-LOCKING	1					
6	90387–12046	COLLAR	1					
7	90102–12005	BOLT, PIN HOLE HEX.	1					
8	90201–12034	WASHER, PLATE	1					
9	91402–30025	PIN, COTTER	1					

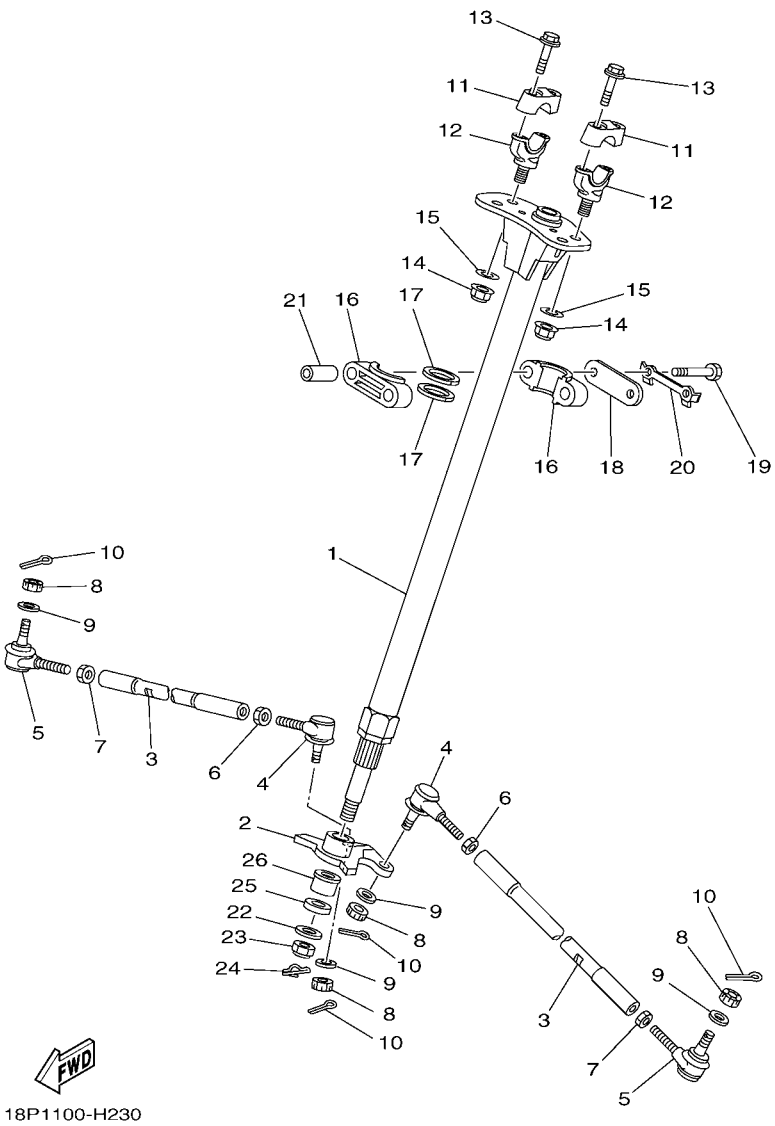

FIG. 23 STEERING

REF. NO.	PART NO.	DESCRIPTION	USA					REMARKS
1	18P–23813–00	COLUMN, STEERING 2	1					
2	18P–23816–00	ARM, PITMAN	1					
3	18P–23831–00	ROD, TIE	2					
4	1S3–23841–20	JOINT, UNIVERSAL 1	2					
5	1S3–23845–20	JOINT, UNIVERSAL 2	2					
6	90170–12055	NUT	2					
7	90170–12054	NUT	2					(RH. THREAD)
8	90171–10001	NUT, CASTLE	4					
9	90209–10229	WASHER	4					
10	91402–20020	PIN, COTTER	4					
11	18P–23441–00	HOLDER, HANDLE UPPER	2					
12	18P–23442–10	HOLDER, HANDLE UNDER	2					
13	90105–08154	BOLT, FLANGE	4					
14	90185–12002	NUT, SELF-LOCKING	2					
15	90201–12034	WASHER, PLATE	2					
16	1UY–23812–00	PLANE BEARING, STEERING	2					
17	93112–31011	OIL SEAL	2					
18	1UY–23868–01	BRACKET, STEERING LOWER	1					
19	97022–08065	BOLT	2					
20	1UY–23894–01	WASHER, LOCK 1	1					
21	90387–090R0	COLLAR	2					
22	90201–14021	WASHER, PLATE	1					
23	90185–14009	NUT, SELF-LOCKING	1					
24	91402–20025	PIN, COTTER	1					
25	90387–176R6	COLLAR	1					
26	90387–17013	COLLAR	1					

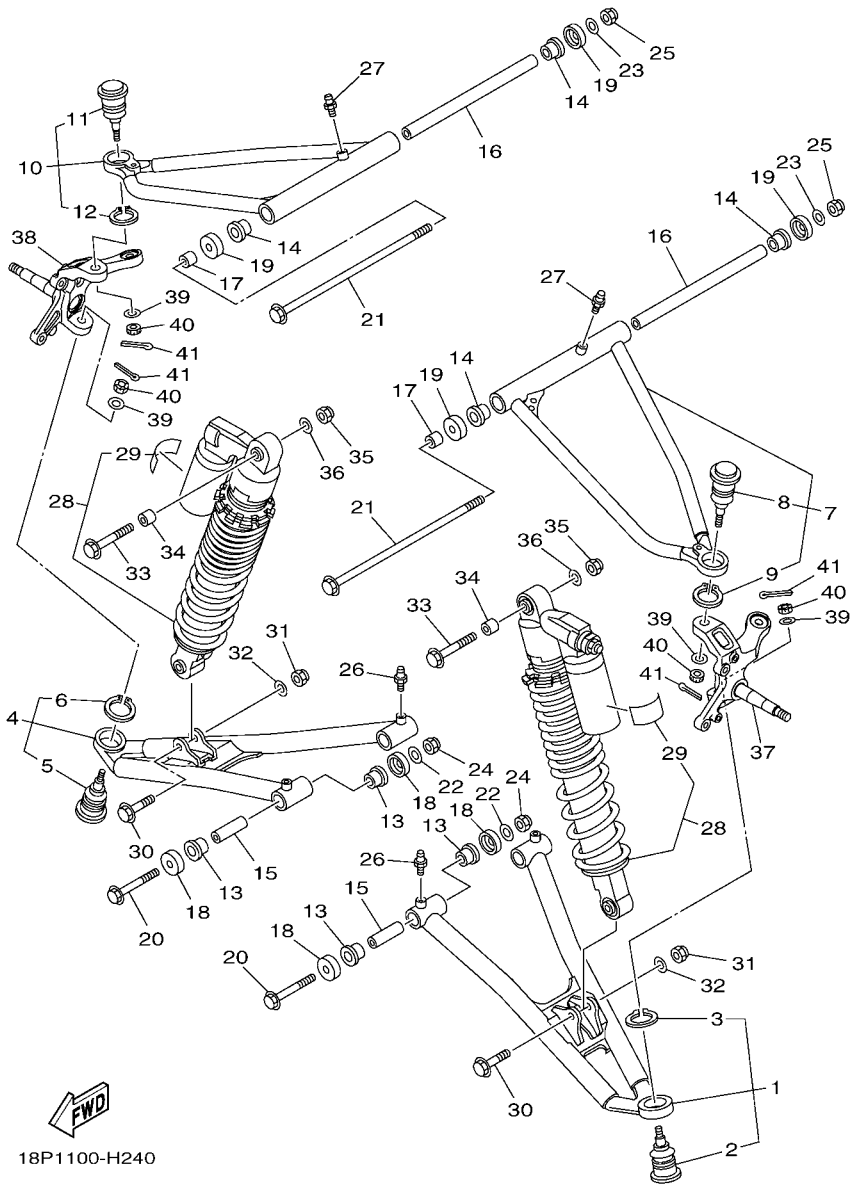

FIG. 24 FRONT SUSPENSION & WHEEL

REF. NO.	PART NO.	DESCRIPTION	USA					REMARKS
1	18P–23570–00–33	FRONT LOWER ARM COMP. (LEFT)	1					YB FOR DPBSE
	18P–23570–00–P0	FRONT LOWER ARM COMP. (LEFT)	1					S8 FOR BWS1
2	5LP–23579–00	.BALL JOINT 2	1					
3	99009–30400	.CIRCLIP	1					
4	18P–23580–00–33	FRONT LOWER ARM COMP. (RIGHT)	1					YB FOR DPBSE
	18P–23580–00–P0	FRONT LOWER ARM COMP. (RIGHT)	1					S8 FOR BWS1
5	5LP–23579–00	.BALL JOINT 2	1					
6	99009–30400	.CIRCLIP	1					
7	18P–23540–00–33	FRONT UPPER ARM COMP. (LEFT)	1					YB FOR DPBSE
	18P–23540–00–P0	FRONT UPPER ARM COMP. (LEFT)	1					S8 FOR BWS1
8	5LP–23579–00	.BALL JOINT 2	1					
9	99009–30400	.CIRCLIP	1					
10	18P–23550–00–33	FRONT UPPER ARM COMP. (RIGHT)	1					YB FOR DPBSE
	18P–23550–00–P0	FRONT UPPER ARM COMP. (RIGHT)	1					S8 FOR BWS1
11	5LP–23579–00	.BALL JOINT 2	1					
12	99009–30400	.CIRCLIP	1					
13	90381–15088	BUSH, SOLID	8					
14	90381–15088	BUSH, SOLID	4					
15	90387–101R3	COLLAR	4					
16	90387–10069	COLLAR	2					
17	90387–10043	COLLAR	2					
18	5YT–23517–00	COVER, THRUST 1	8					
19	5YT–23517–00	COVER, THRUST 1	4					
20	90105–10135	BOLT, FLANGE	4					
21	90105–10301	BOLT, FLANGE	2					
22	90201–10037	WASHER, PLATE	4					
23	90201–10037	WASHER, PLATE	2					

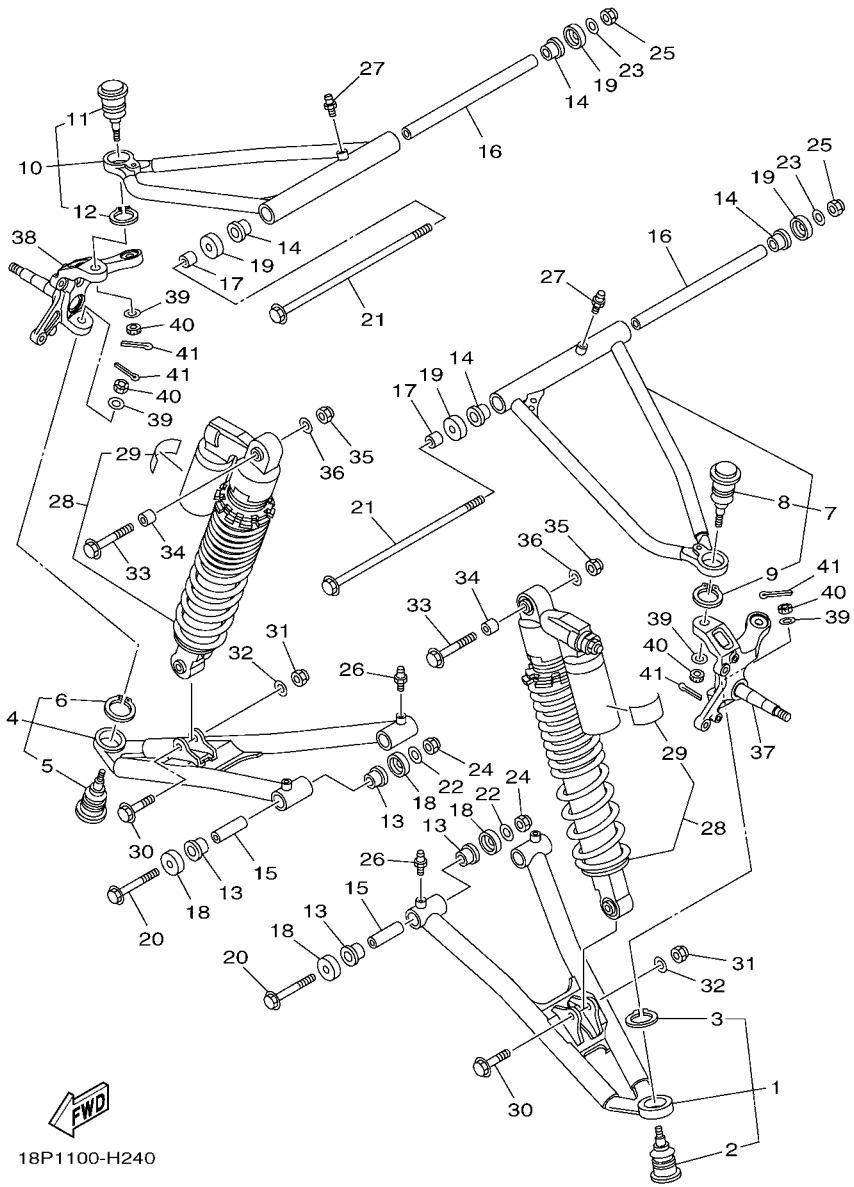

FIG. 24 FRONT SUSPENSION & WHEEL

REF. NO.	PART NO.	DESCRIPTION	USA					REMARKS
24	90185–10012	NUT, SELF-LOCKING	4					
25	90185–10012	NUT, SELF-LOCKING	2					
26	93700–06004	NIPPLE, GREASE	4					
27	93700–06004	NIPPLE, GREASE	2					
28	18P–23350–00	SHOCK ABSORBER ASSY	2					
29	4AA–22259–80	.LABEL, WARNING	1					
30	90105–10339	BOLT, FLANGE	2					
31	90185–10012	NUT, SELF-LOCKING	2					
32	90201–10035	WASHER, PLATE	2					
33	90105–10351	BOLT, FLANGE	2					
34	90387–10043	COLLAR	2					
35	90185–10012	NUT, SELF-LOCKING	2					
36	90201–10037	WASHER, PLATE	2					
37	18P–23501–00	STEERING KNUCKLE ASSY (LEFT)	1					
38	18P–23502–00	STEERING KNUCKLE ASSY (RIGHT)	1					
39	90209–10229	WASHER	4					
40	90171–10001	NUT, CASTLE	4					
41	91402–20020	PIN, COTTER	4					

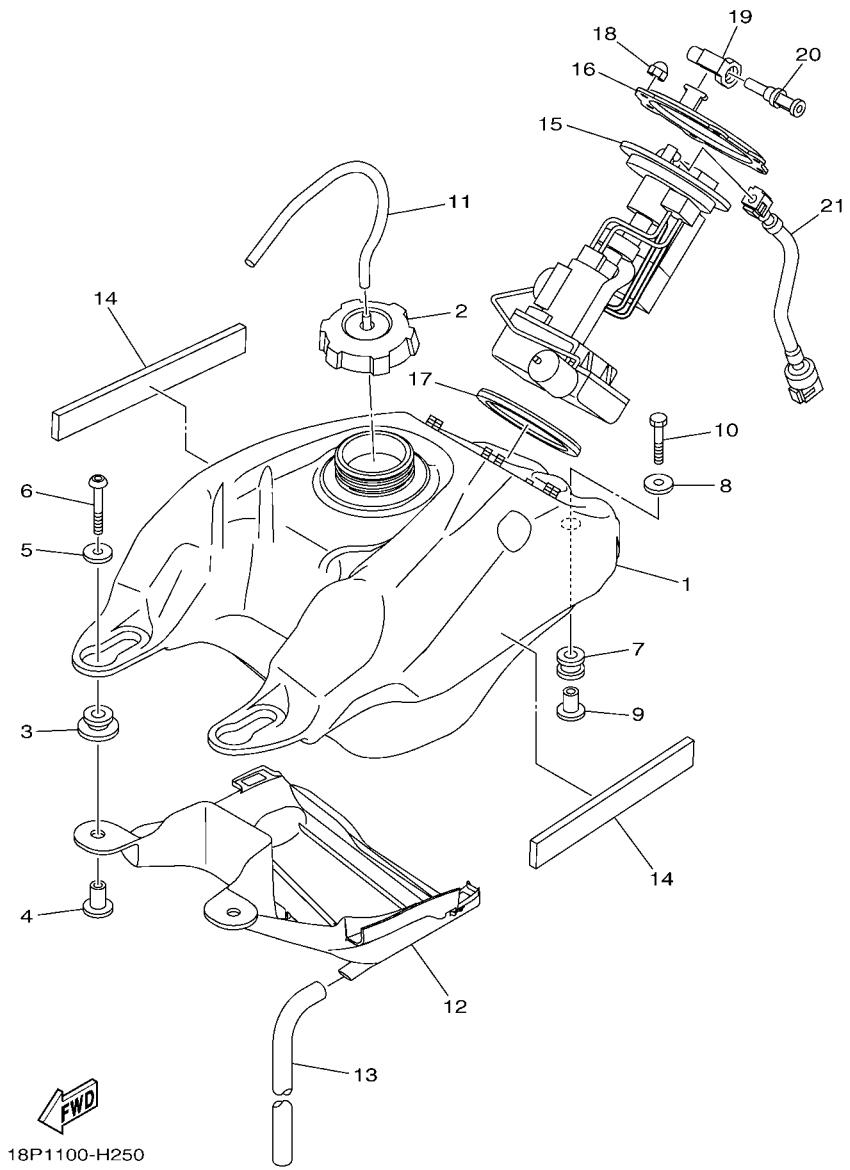

FIG. 25 FUEL TANK

REF. NO.	PART NO.	DESCRIPTION	USA					REMARKS
1	18P–24110–00	FUEL TANK COMP.	1					
2	5KM–24610–00	CAP ASSY	1					
3	90480–18004	GROMMET	2					
4	90387–066H4	COLLAR	2					
5	90201–06033	WASHER, PLATE	2					
6	92012–06040	BOLT, BUTTON HEAD	2					
7	90480–18290	GROMMET	1					
8	90201–06033	WASHER, PLATE	1					
9	90387–066J1	COLLAR	1					
10	95812–06030	BOLT, FLANGE	1					
11	90445–08008	HOSE	1					
12	18P–2414H–00	DAMPER, PLATE 1	1					
13	18P–2247A–00	HOSE 1	1					
14	90520–08001	DAMPER, PLATE	2					
15	18P–13907–00	FUEL PUMP COMP.	1					
16	18P–24491–00	BRACKET, FUEL PUMP	1					
17	1S3–24486–00	O-RING	1					
18	95302–06800	NUT, CROWN	6					
19	18P–2464V–00	CASE, CAP	1					
20	18P–2467E–00	CAP	1					
21	18P–13971–00	PIPE, FUEL 1	1					

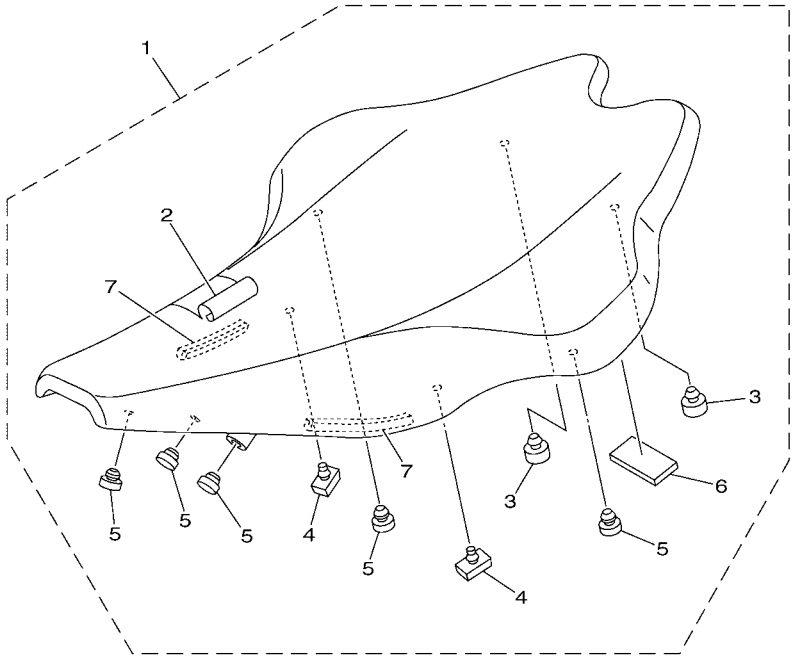

18P1100-H260

FIG. 26 SEAT

REF. NO.	PART NO.	DESCRIPTION	USA					REMARKS
1	18P–24710–00	SINGLE SEAT ASSY	1					UR FOR DPBSE
	18P–24710–10	SINGLE SEAT ASSY	1					UR FOR BWS1
2	18P–2470F–00	.SEAT COVER COMP.	1					UR FOR DPBSE
	18P–2470F–10	.SEAT COVER COMP.	1					UR FOR BWS1
3	371–27114–00	.STOPPER, MAIN STAND	2					
4	214–24724–00	.DAMPER, SEAT	2					
5	22W–24741–00	.PAD, SEAT	5					
6	18P–24725–00	.SPACER 1	1					
7	18P–24723–00	.DAMPER, SEAT	2					

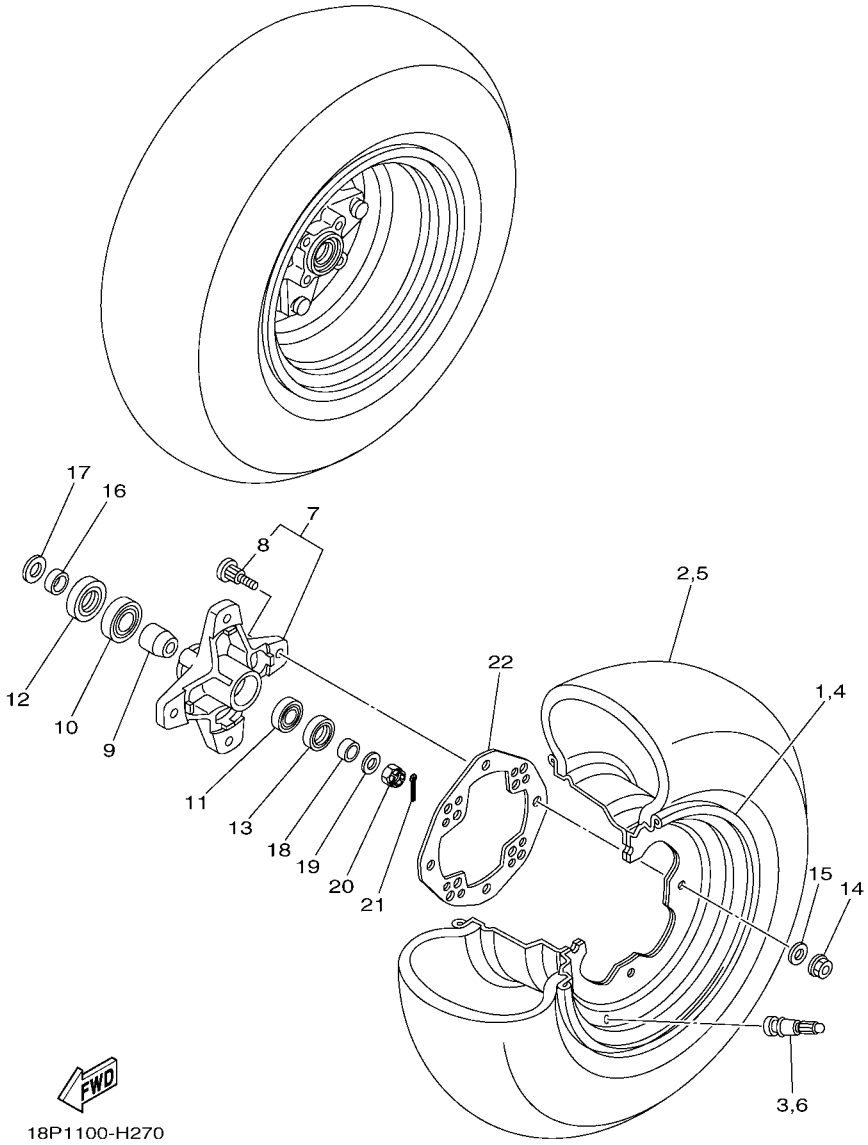

FIG. 27 FRONT WHEEL

REF. NO.	PART NO.	DESCRIPTION	USA					REMARKS
1	5LP–25180–21	WHEEL COMP.	1					
2	94107–10025	TIRE (AT21X7R10 KT351 T/L(N))	1					DUNLOP
3	93900–00030	VALVE, RIM (TR412)	1					TAIHEIYO
4	5LP–25180–21	WHEEL COMP.	1					
5	94107–10025	TIRE (AT21X7R10 KT351 T/L(N))	1					DUNLOP
6	93900–00030	VALVE, RIM (TR412)	1					TAIHEIYO
7	1S3–25111–00	HUB, FRONT	2					
8	90114–10006	.BOLT, SERRATION	4					
9	5LP–25117–00	SPACER, BEARING	2					
10	93306–00446	BEARING	2					
11	93306–20231	BEARING	2					
12	93105–26026	OIL SEAL	2					
13	93102–22216	OIL SEAL	2					
14	95702–10500	NUT, WITH WASHER	8					
15	92902–10200	WASHER	8					
16	90387–20005	COLLAR	2					
17	90201–20022	WASHER, PLATE	2					
18	90387–150R1	COLLAR	2					
19	90201–14586	WASHER, PLATE	2					
20	90171–14002	NUT, CASTLE	2					
21	91402–30025	PIN, COTTER	2					
22	1S3–25127–00	COVER, PLATE	2					

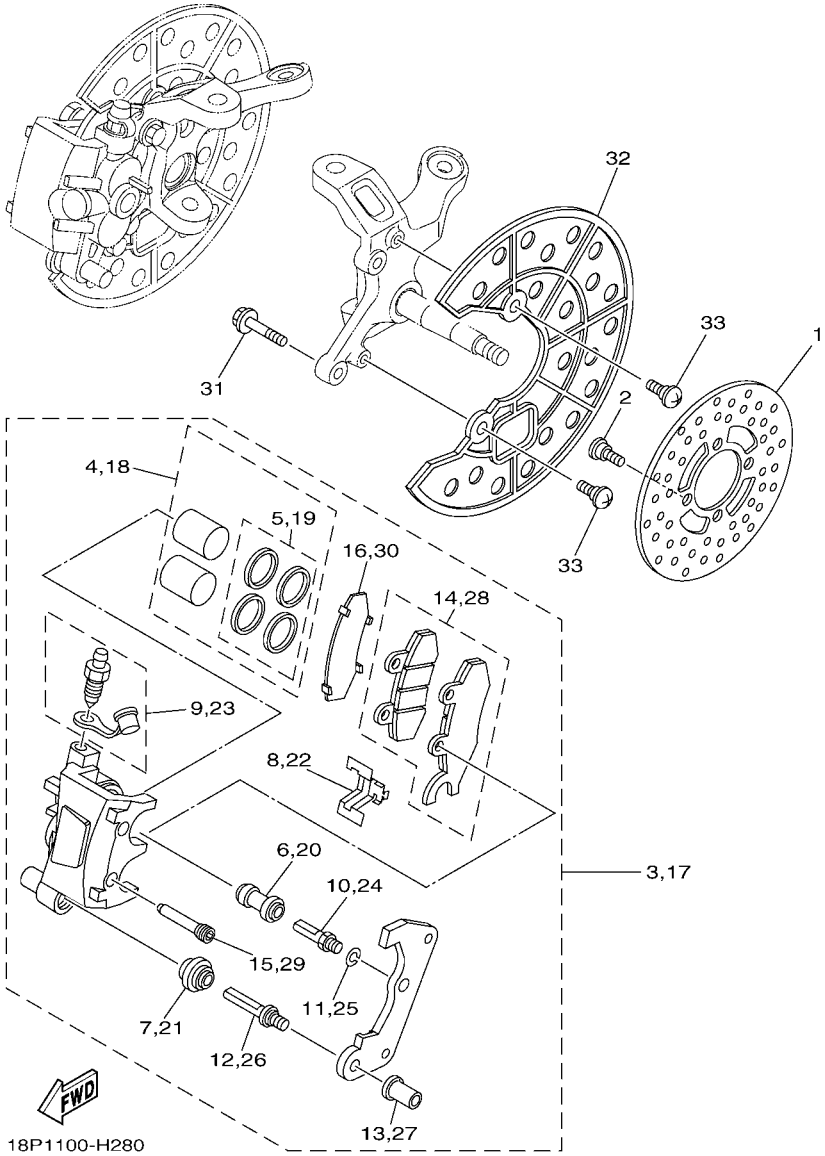

FIG. 28 FRONT BRAKE CALIPER

REF. NO.	PART NO.	DESCRIPTION	USA					REMARKS
1	3GD–2582T–10	DISC, BRAKE (LEFT)	2					
2	90109–08082	BOLT	8					
3	5TG–2580T–11	CALIPER ASSY (LEFT)	1					
4	5TG–W0057–00	.PISTON ASSY, CALIPER	1					
5	3LC–W0047–50	..CALIPER SEAL KIT	1					
6	1UY–25937–51	.BOOT 2	1					
7	3JD–25917–00	.BOOT, CALIPER	1					
8	3JD–25919–00	.SUPPORT, PAD	1					
9	1UY–W0048–50	.BLEED SCREW KIT	1					
10	1UY–25926–51	.BOLT	1					
11	1UY–25938–51	.WASHER, SPRING	1					
12	3JD–25926–00	.BOLT	1					
13	3JD–25961–00	.NUT	1					
14	5TG–W0045–20	.BRAKE PAD KIT	1					
15	5TG–25924–00	.PIN, PAD	2					
16	1S3–25828–00	.SHIM, CALIPER	1					
17	5TG–2580U–11	CALIPER ASSY (RIGHT)	1					
18	5TG–W0057–00	.PISTON ASSY, CALIPER	1					
19	3LC–W0047–50	..CALIPER SEAL KIT	1					
20	1UY–25937–51	.BOOT 2	1					
21	3JD–25917–00	.BOOT, CALIPER	1					
22	3JD–25919–00	.SUPPORT, PAD	1					
23	1UY–W0048–50	.BLEED SCREW KIT	1					
24	1UY–25926–51	.BOLT	1					
25	1UY–25938–51	.WASHER, SPRING	1					
26	3JD–25926–00	.BOLT	1					
27	3JD–25961–00	.NUT	1					

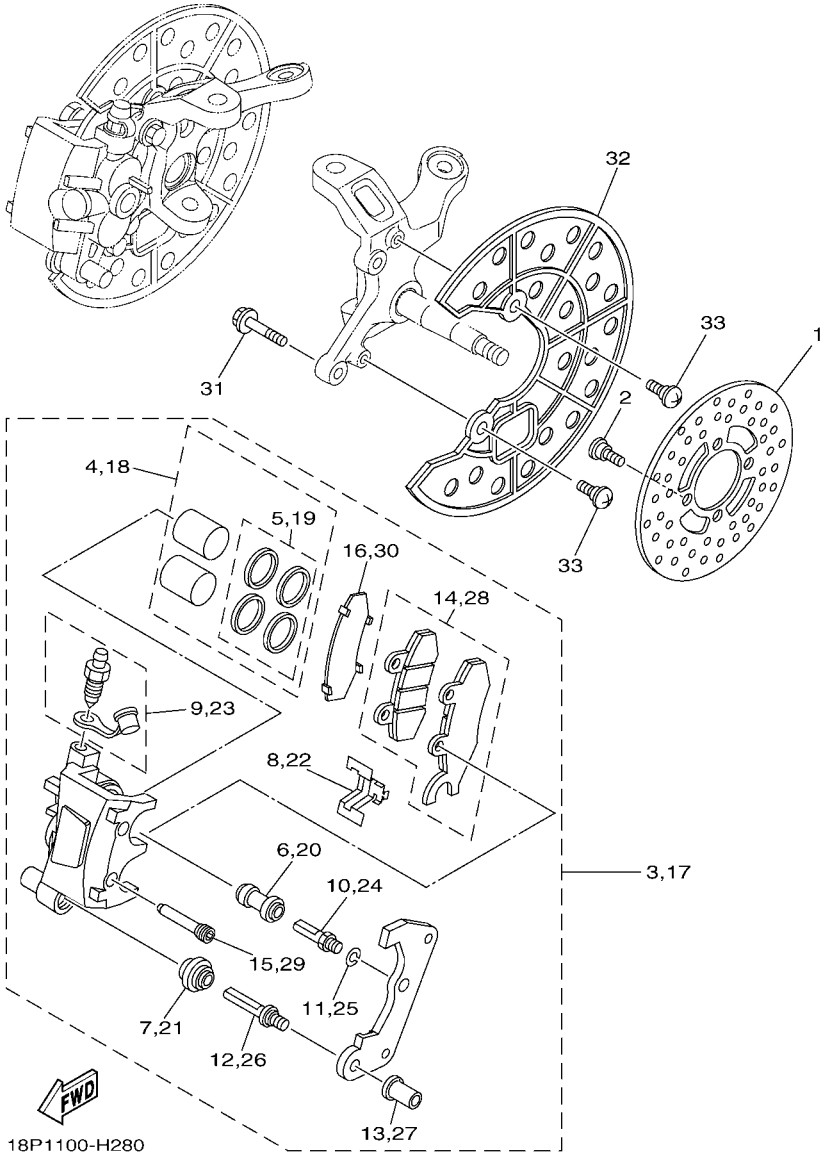

FIG. 28 FRONT BRAKE CALIPER

REF. NO.	PART NO.	DESCRIPTION	USA					REMARKS
28	5TG–W0045–30	.BRAKE PAD KIT	1					
29	5TG–25924–00	.PIN, PAD	2					
30	1S3–25828–00	.SHIM, CALIPER	1					
31	90105–08184	BOLT, FLANGE	4					
32	5TG–2514A–00	RING, WHEEL 1	2					
33	90154–06014	SCREW, BINDING	4					

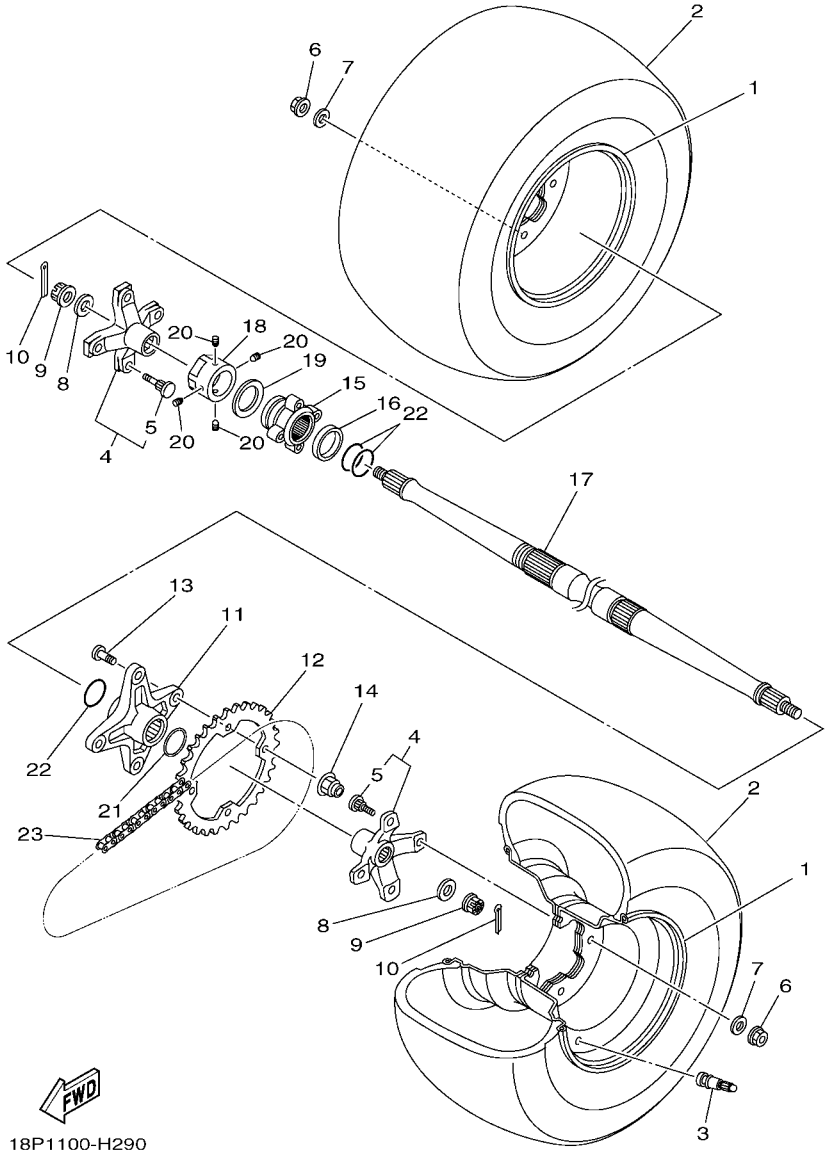

FIG. 29 REAR WHEEL

REF. NO.	PART NO.	DESCRIPTION	USA					REMARKS
1	5LP–25390–21	REAR WHEEL COMP.	2					
2	94110–09025	TIRE (AT20X10R9 KT356 TL(N))	2					DUNLOP
3	93900–00022	VALVE, RIM (TR413)	2					TAIHEIYO
4	18P–25383–00	COLLAR, WHEEL	2					
5	90114–10013	.BOLT, SERRATION	4					
6	95702–10500	NUT, WITH WASHER	8					
7	92902–10200	WASHER	8					
8	90201–16023	WASHER, PLATE	2					
9	90171–16002	NUT, CASTLE	2					
10	90252–03001	PIN, COTTER	2					
11	18P–25386–00	COLLAR, SPROCKET AXLE	1					
12	5TG–25438–10	SPROCKET, DRIVEN (38T)	1					
13	90109–10013	BOLT	4					
14	90185–10011	NUT, SELF-LOCKING	4					
15	18P–25712–00	BRACKET, DISC	1					
16	90387–40001	COLLAR	1					
17	18P–25381–00	AXLE, WHEEL	1					
18	90179–38001	NUT	1					
19	90208–39001	WASHER, CONICAL SPRING	1					
20	90113–06055	BOLT, SET	4					
21	18P–25415–00	CIRCLIP	1					
22	93210–37003	O-RING	3					
23	94582–13098	CHAIN (DID520MXV 98LE)	1					

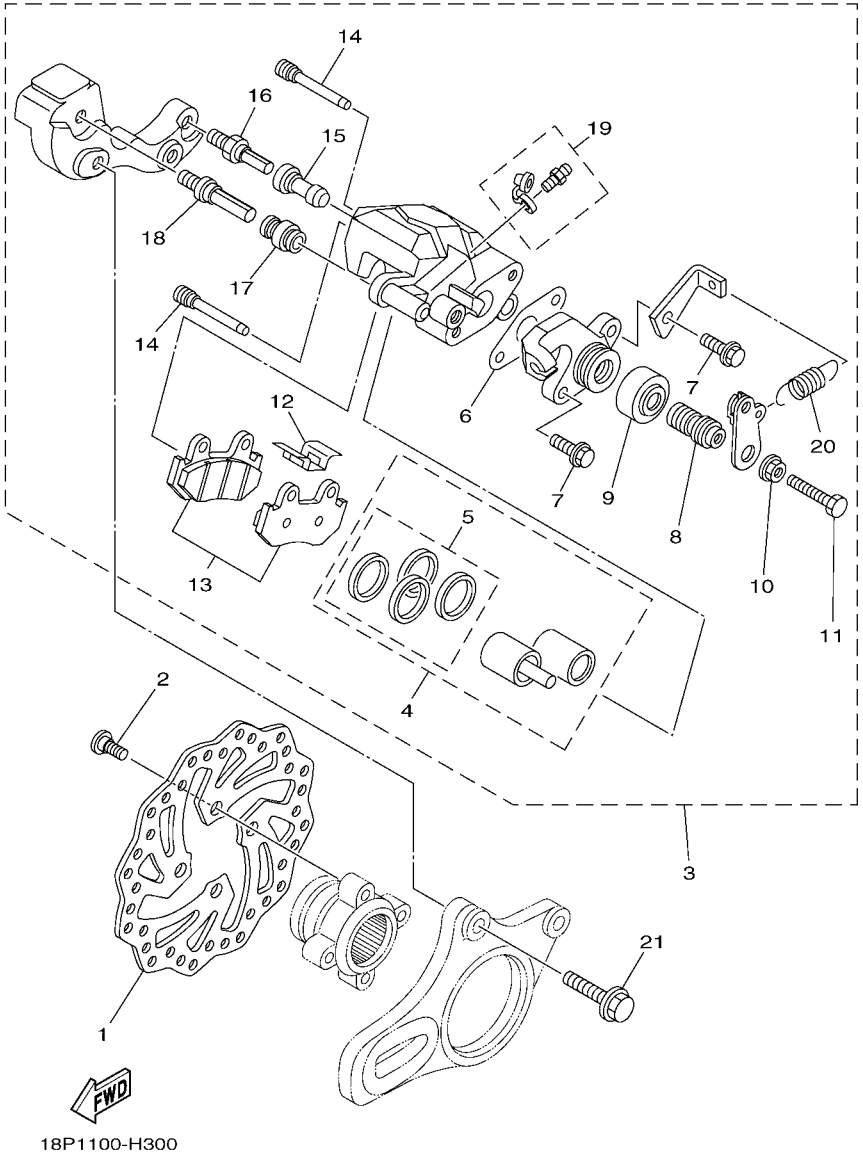

FIG. 30 REAR BRAKE CALIPER

REF. NO.	PART NO.	DESCRIPTION	USA					REMARKS
1	1S3–2582W–20	DISK, REAR BRAKE 2	1					
2	90149–08044	SCREW	4					
3	5TG–2580W–20	CALIPER ASSY, REAR 2	1					
4	5TG–W0057–10	.PISTON ASSY, CALIPER	1					
5	5TG–W0047–00	..CALIPER SEAL KIT	1					
6	5TG–25975–00	.RUBBER, BUSHING	1					
7	5UG–25833–00	.BOLT, FITTING	2					
8	5TG–25978–00	.SHAFT L	1					
9	1UY–25974–51	.BOOT	1					
10	1UY–25973–51	.NUT	1					
11	5TG–25972–00	.ADJUSTBOLT	1					
12	3LD–25934–01	.SPRING, PAD	1					
13	5TG–W0046–10	.BRAKE PAD KIT 2	1					
14	5DH–25933–00	.PIN, PAD	2					
15	1UY–25937–51	.BOOT 2	1					
16	3SP–25914–51	.PIN, SLIDE	1					
17	3JD–25917–00	.BOOT, CALIPER	1					
18	3SP–25926–51	.BOLT	1					
19	1UY–W0048–50	.BLEED SCREW KIT	1					
20	5TG–25977–50	.SPRING, RETURN	1					
21	90105–101A9	BOLT, FLANGE	2					

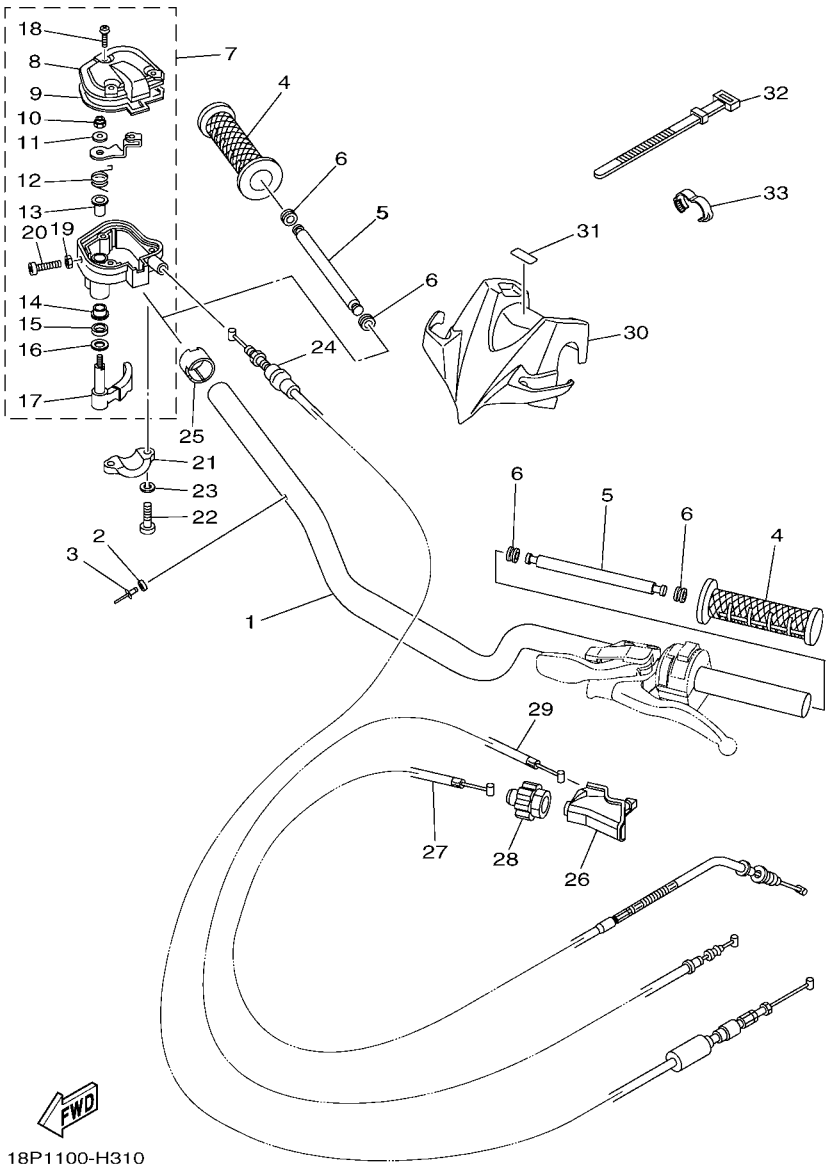

FIG. 31 STEERING HANDLE & CABLE

REF. NO.	PART NO.	DESCRIPTION	USA					REMARKS
1	5D3–26111–10	HANDLEBAR	1					
2	90387–02001	COLLAR	1					
3	90267–24143	RIVET, BLIND	1					
4	5LP–26241–00	GRIP	2					
5	18P–2622H–00	WEIGHT	2					
6	90480–11006	GROMMET	4					
7	1S3–26250–00	THROTTLE LEVER ASSY	1					
8	1S3–2628F–00	.CAP, GEAR	1					
9	1S3–2628G–00	.GASKET	1					
10	95602–05100	.NUT, U	1					
11	1NV–26398–00	.WASHER	1					
12	1NV–26304–00	.SPRING	1					
13	1NV–26259–01	.COLLAR	1					
14	1NV–2625K–00	.COLLAR	1					
15	93104–09025	.OIL SEAL	1					
16	1NV–26129–00	.WASHER	1					
17	1S3–2625G–00	.LEVER, THROTTLE	1					
18	90149–04278	.SCREW	3					
19	95302–05700	.NUT	1					
20	98502–05020	.SCREW, PAN HEAD	1					
21	4V4–82913–00	HOLDER, LEVER LOWER 1	1					
22	98502–05020	SCREW, PAN HEAD	2					
23	92902–05100	WASHER, SPRING	2					
24	18P–26311–00	CABLE, THROTTLE 1	1					
25	1UY–26259–00	COLLAR	1					
26	5TG–26372–00	COVER, HANDLE LEVER 1	1					
27	18P–26335–00	CABLE, CLUTCH	1					

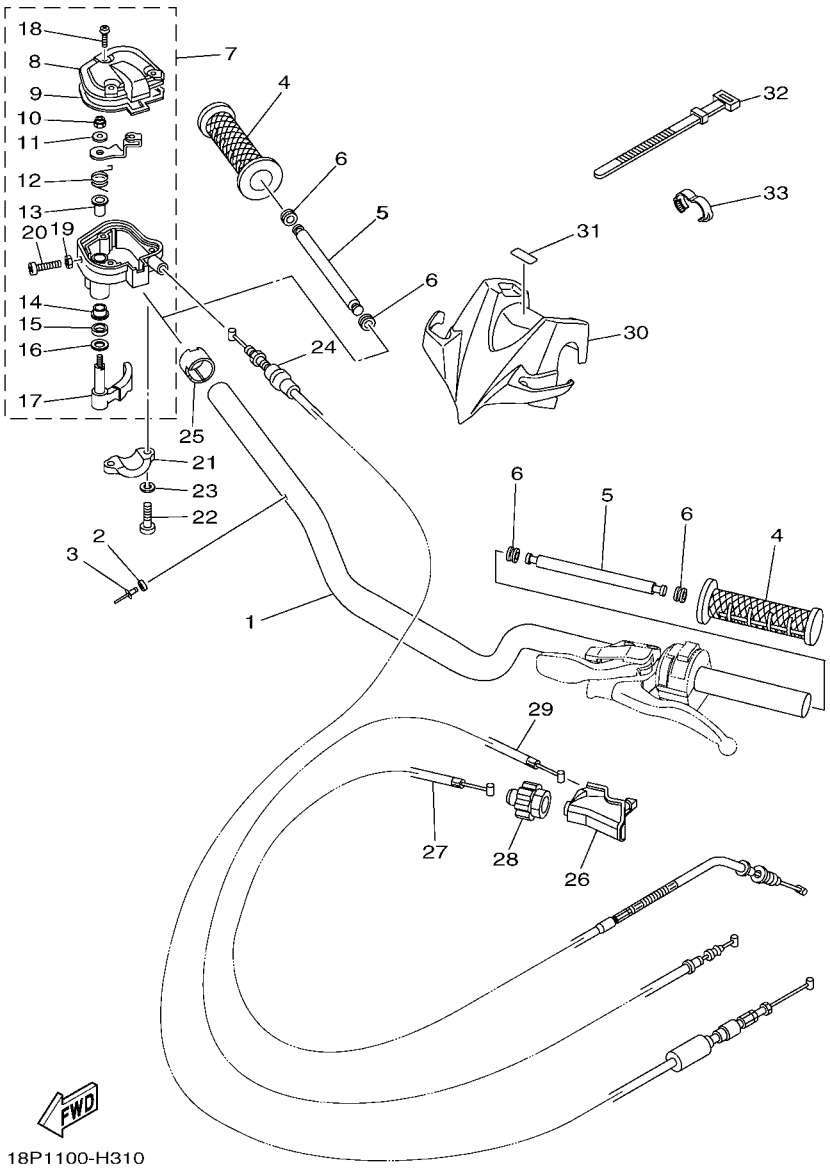

FIG. 31 STEERING HANDLE & CABLE

REF. NO.	PART NO.	DESCRIPTION	USA					REMARKS
28	1C3–26342–50	BOOT, CABLE	1					
29	18P–26341–00	WIRE, BRAKE 1	1					
30	18P–26124–00	PROTECTOR, HANDLEBAR	1					
31	5D3–26219–10	EMBLEM	1					
32	437–83936–01	BAND, SWITCH CORD	2					
33	90464–16001	CLAMP	1					

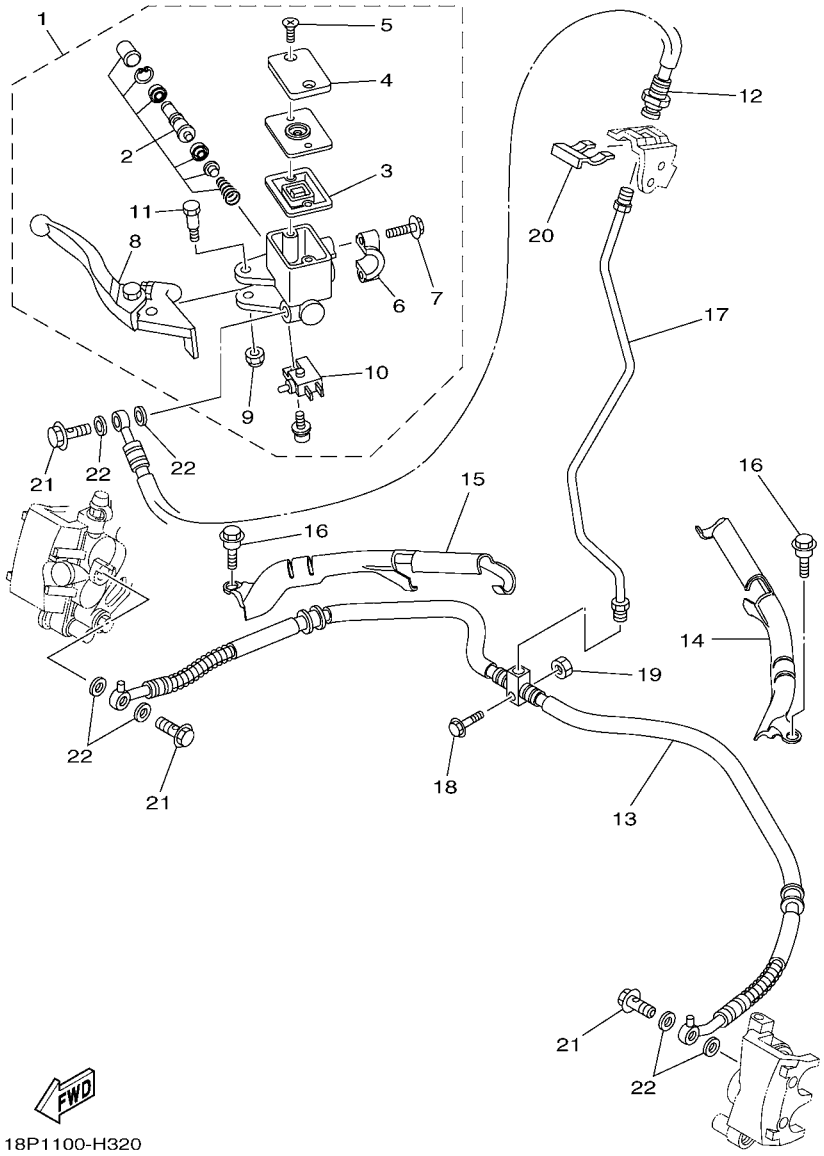

FIG. 32 FRONT MASTER CYLINDER

REF. NO.	PART NO.	DESCRIPTION	USA					REMARKS
1	5D3–2583T–00	MASTER CYLINDER ASSY	1					
2	5D3–W0041–00	.CYLINDER KIT, MASTER	1					
3	4TT–25854–00	.GASKET, DIAPHRAGM	1					
4	5D3–25852–00	.CAP, RESERVOIR	1					
5	4NK–2589H–00	.SCREW	2					
6	5LP–25867–00	.BRACKET, MASTER CYLINDER	1					
7	5MV–25833–00	.BOLT, FITTING	2					
8	5D3–83922–00	.LEVER 2	1					
9	95604–06100	.NUT, U	1					
10	5D3–83980–00	.FRONT STOP SWITCH ASSY	1					
11	5MV–2589F–00	.BOLT, LEVER	1					
12	18P–25872–00	HOSE, BRAKE 1	1					
13	18P–25873–00	HOSE, BRAKE 2	1					
14	18P–25875–00	HOLDER, BRAKE HOSE 1	1					
15	18P–25876–00	HOLDER, BRAKE HOSE 2	1					
16	90109–067F4	BOLT	2					
17	18P–25871–00	PIPE, BRAKE	1					
18	95822–06035	BOLT, FLANGE	1					
19	95312–06600	NUT	1					
20	2GU–25866–00	CIRCLIP	1					
21	90401–10015	BOLT, UNION	3					
22	90201–10118	WASHER, PLATE	6					

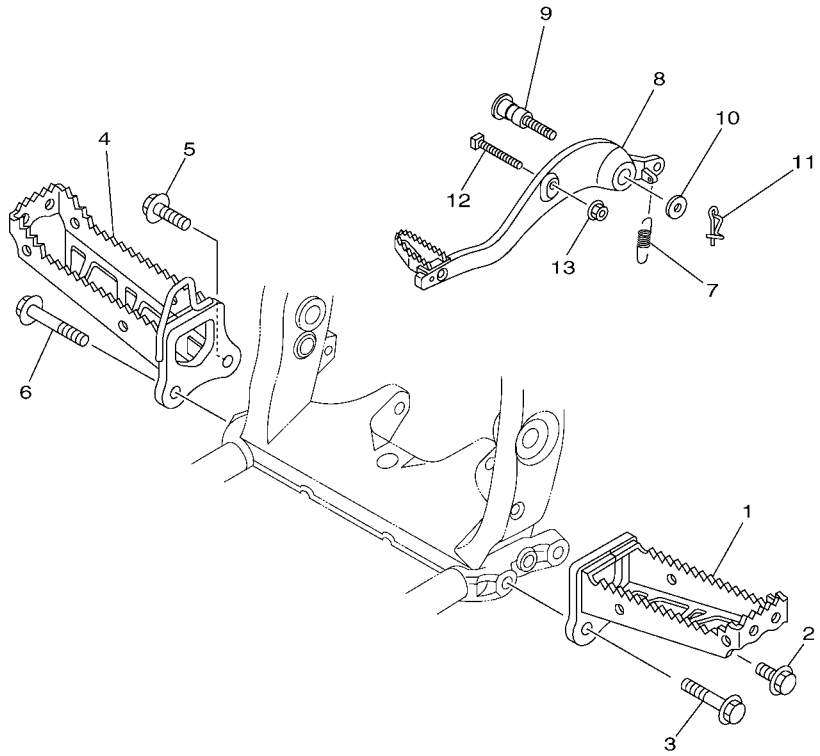

18P1100-H330

FIG. 33 STAND & FOOTREST

REF. NO.	PART NO.	DESCRIPTION	USA					REMARKS
1	18P–27411–00	FOOTREST 1	1					
2	95812–12025	BOLT, FLANGE	1					
3	95812–12055	BOLT, FLANGE	1					
4	18P–27421–00	FOOTREST 2	1					
5	95812–12035	BOLT, FLANGE	1					
6	95812–12065	BOLT, FLANGE	1					
7	90506–25001	SPRING, TENSION	1					
8	18P–27211–00	PEDAL, BRAKE	1					
9	18P–27217–00	BOLT	1					
10	90201–08077	WASHER, PLATE	1					
11	90468–16191	CLIP	1					
12	90108–05001	BOLT, SQUARE	1					
13	95602–05200	NUT, SELF-LOCKING	1					

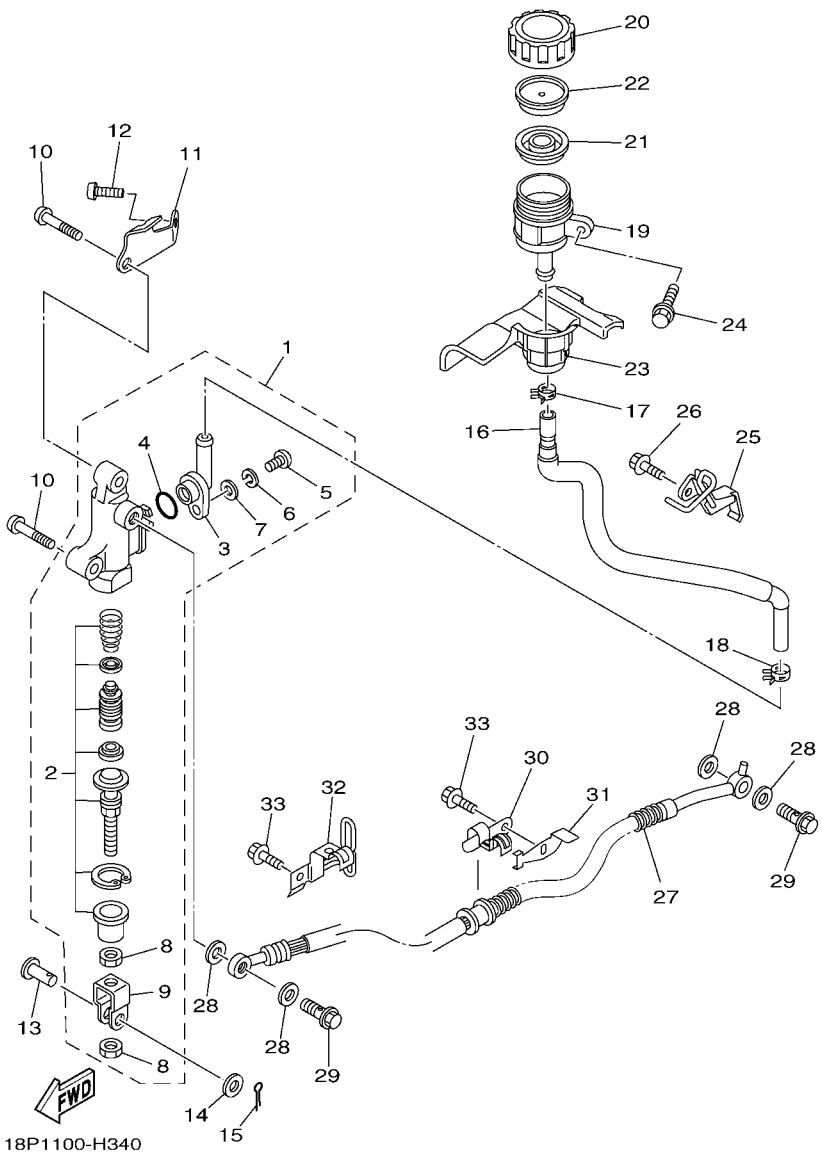

FIG. 34 REAR MASTER CYLINDER

REF. NO.	PART NO.	DESCRIPTION	USA					REMARKS
1	1S3–2580E–00	REAR MASTER CYLINDER ASSY	1					
2	1S3–W0042–50	.CYLINDER KIT, MASTER	1					
3	1AE–2582A–00	.JOINT	1					
4	93210–15620	.O-RING	1					
5	98506–04012	.SCREW, PAN HEAD	1					
6	92906–04100	.WASHER, SPRING	1					
7	92906–04600	.WASHER, PLATE	1					
8	4SS–27218–00	.NUT	2					
9	2YK–27222–00	.JOINT	1					
10	92012–08035	BOLT, BUTTON HEAD	2					
11	18P–27453–00	COVER 1	1					
12	92012–08012	BOLT, BUTTON HEAD	1					
13	90240–08124	PIN, CLEVIS	1					
14	90201–08083	WASHER, PLATE	1					
15	91401–16012	PIN, COTTER	1					
16	18P–25895–00	HOSE, RESERVOIR	1					
17	90467–11044	CLIP	1					
18	90467–14057	CLIP	1					
19	5JJ–25894–00	TANK, RESERVOIR	1					
20	3XP–25852–50	CAP, RESERVOIR	1					
21	2VN–25854–00	GASKET, DIAPHRAGM	1					
22	2VN–25855–00	BUSH,DIAPHRAGM	1					
23	18P–25897–00	DAMPER	1					
24	90119–06177	BOLT, WITH WASHER	1					
25	18P–27263–00	BRACKET 1	1					
26	95022–06012	BOLT, FLANGE	1					
27	18P–25874–00	HOSE, BRAKE	1					

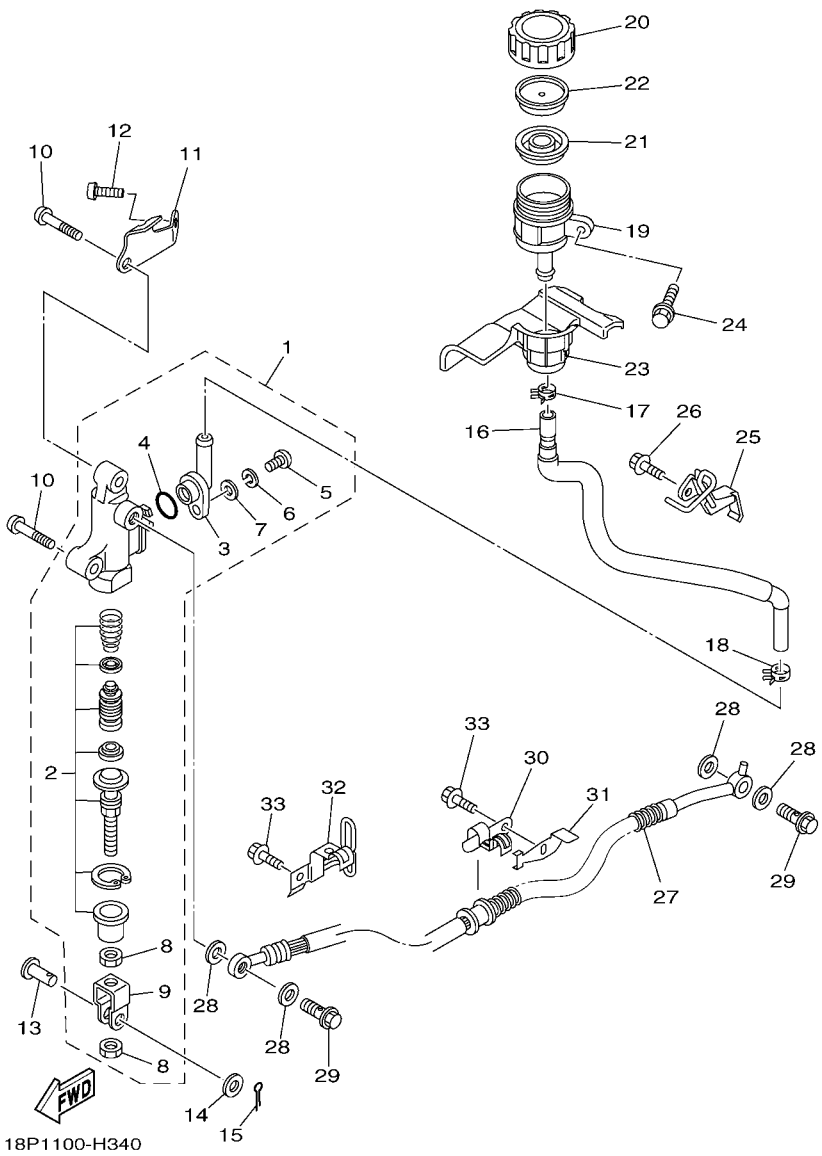

FIG. 34 REAR MASTER CYLINDER

REF. NO.	PART NO.	DESCRIPTION	USA					REMARKS
28	90201–10118	WASHER, PLATE	4					
29	90401–10015	BOLT, UNION	2					
30	18P–25886–00	HOLDER, BRAKE HOSE	1					
31	18P–2743E–00	STOPPER	1					
32	18P–23317–00	HOLDER, CABLE	1					
33	90105–06063	BOLT, FLANGE	2					

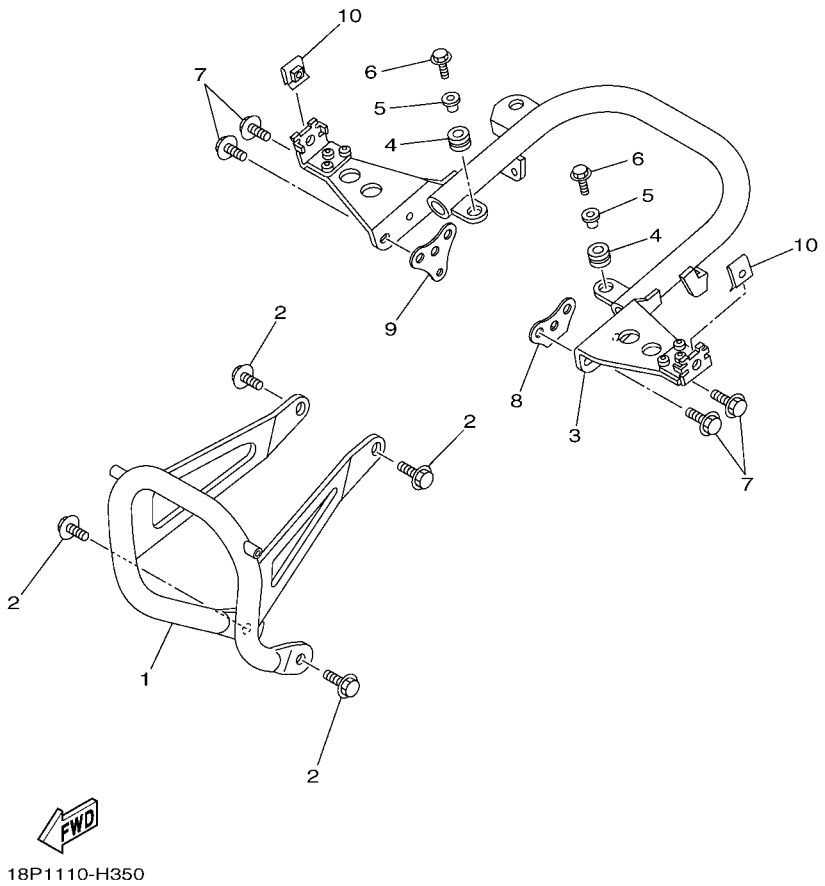

FIG. 35 GUARD

REF. NO.	PART NO.	DESCRIPTION	USA					REMARKS
1	18P–2845N–00	BAR, CARRY FRONT	1					
2	95812–08020	BOLT, FLANGE	4					
3	18P–2845R–00	BAR, CARRY REAR	1					
4	90480–10289	GROMMET	2					
5	90387–06063	COLLAR	2					
6	95812–06020	BOLT, FLANGE	2					
7	95812–08020	BOLT, FLANGE	4					
8	5TG–28215–00	WASHER, SPECIAL	1					
9	18P–28215–00	WASHER, SPECIAL	1					
10	90183–061A5	NUT, SPRING	2					

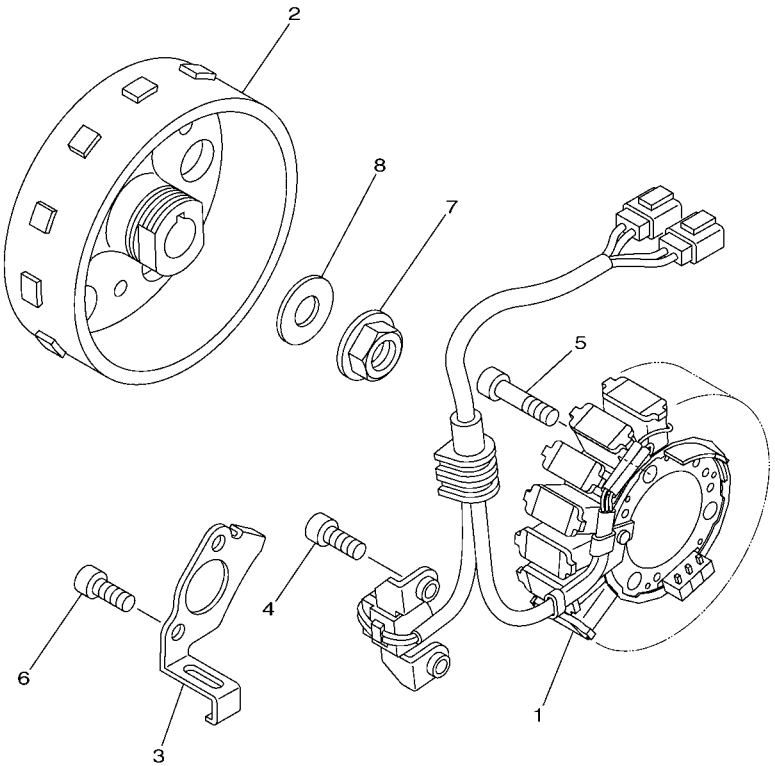

18P1100-H360

FIG. 36 GENERATOR

REF. NO.	PART NO.	DESCRIPTION	USA					REMARKS
1	18P–81410–00	STATOR ASSY	1					
2	18P–81450–00	ROTOR ASSY	1					
3	18P–81528–00	CLAMP 1	1					
4	90110–06168	BOLT, HEXAGON SOCKET HEAD	2					
5	90110–06169	BOLT, HEXAGON SOCKET HEAD	3					
6	90110–06168	BOLT, HEXAGON SOCKET HEAD	2					
7	90179–12657	NUT	1					
8	90201–12020	WASHER, PLATE	1					

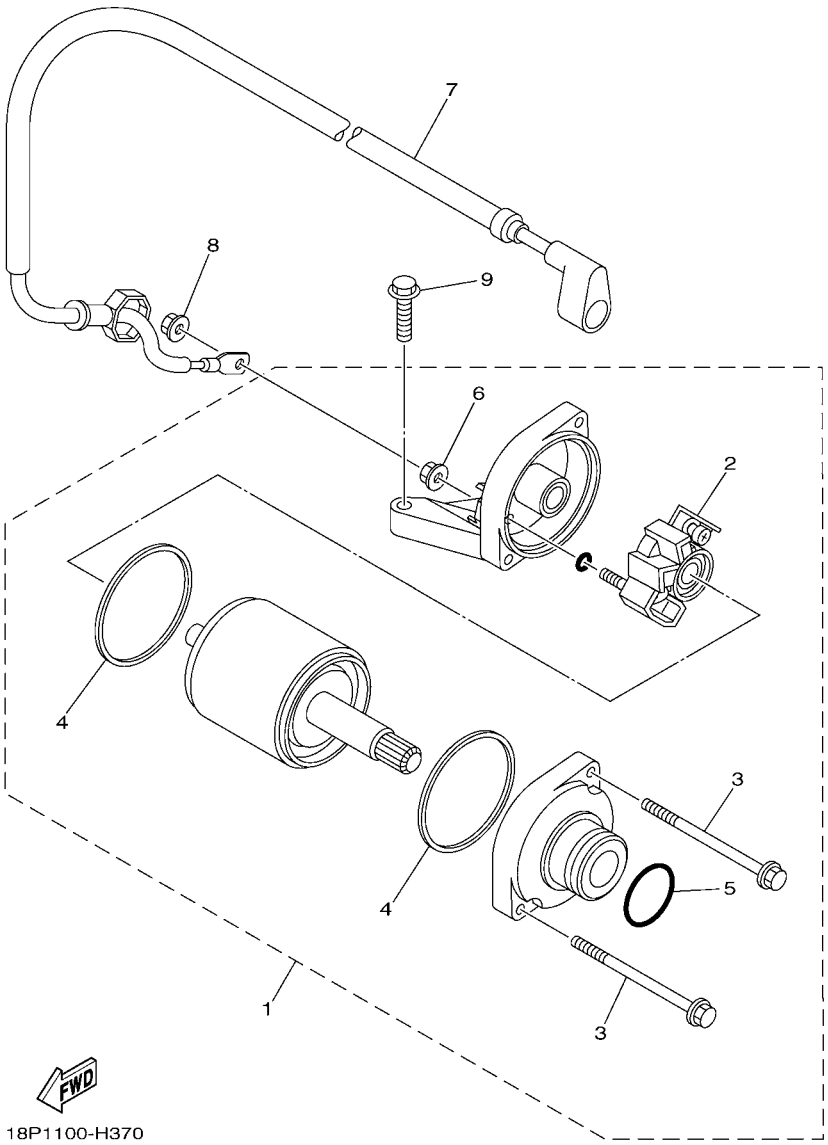

FIG. 37 STARTING MOTOR

REF. NO.	PART NO.	DESCRIPTION	USA					REMARKS
1	18P–81890–00	MOTOR ASSY	1					
2	18P–81801–00	.BRUSH SET	1					
3	18P–81826–00	.BOLT	2					
4	4B5–81844–00	.GASKET	2					
5	1FK–81847–00	.O-RING	1					
6	4XV–8182A–00	.NUT	1					
7	18P–81815–00	CORD, STARTER MOTOR	1					
8	4XV–8182A–00	NUT	1					
9	95022–06025	BOLT, FLANGE	2					

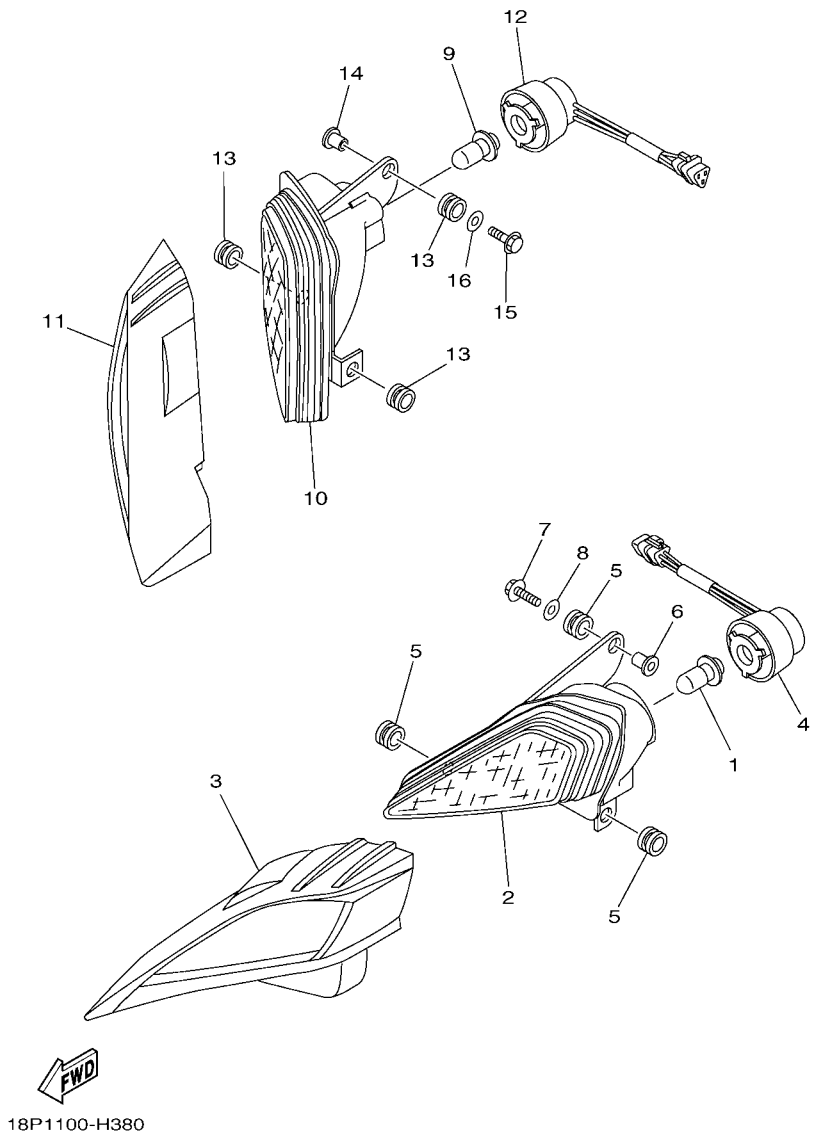

FIG. 38 HEADLIGHT

REF. NO.	PART NO.	DESCRIPTION	USA					REMARKS
1	4KB–84314–01	BULB (12V-30/30W)	1					
2	5TG–84110–03	HEADLIGHT UNIT ASSY	1					
3	18P–84165–00	RIM, HEADLIGHT COVER 1	1					
4	5TG–84140–01	SOCKET CORD ASSY	1					
5	90480–14102	GROMMET	3					
6	90387–06136	COLLAR	1					
7	95802–06025	BOLT, FLANGE	1					
8	90201–06078	WASHER, PLATE	1					
9	4KB–84314–01	BULB (12V-30/30W)	1					
10	5TG–84310–03	HEADLIGHT UNIT ASSY	1					
11	18P–84166–00	RIM, HEADLIGHT COVER 2	1					
12	5TG–84340–01	SOCKET CORD ASSY 1	1					
13	90480–14102	GROMMET	3					
14	90387–06136	COLLAR	1					
15	95802–06025	BOLT, FLANGE	1					
16	90201–06078	WASHER, PLATE	1					

FIG. 39 TAILLIGHT

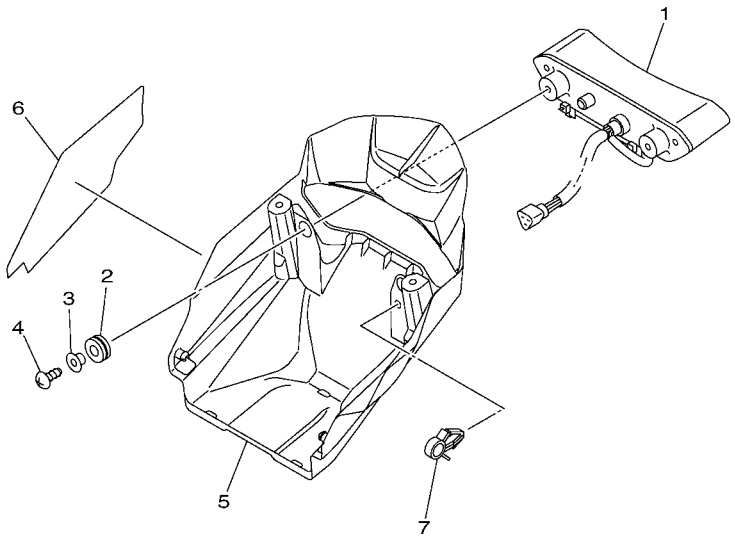

18P1100-H400

REF. NO.	PART NO.	DESCRIPTION	USA					REMARKS
1	1S3–84710–01	TAILLIGHT UNIT ASSY	1					
2	90480–14323	GROMMET	2					
3	90387–06204	COLLAR	2					
4	97702–50025	SCREW, TAPPING	2					
5	18P–84716–00	COVER, TAILLIGHT	1					
6	18P–8411K–00	PLATE, INSULATOR	1					
7	90464–15157	CLAMP	1					

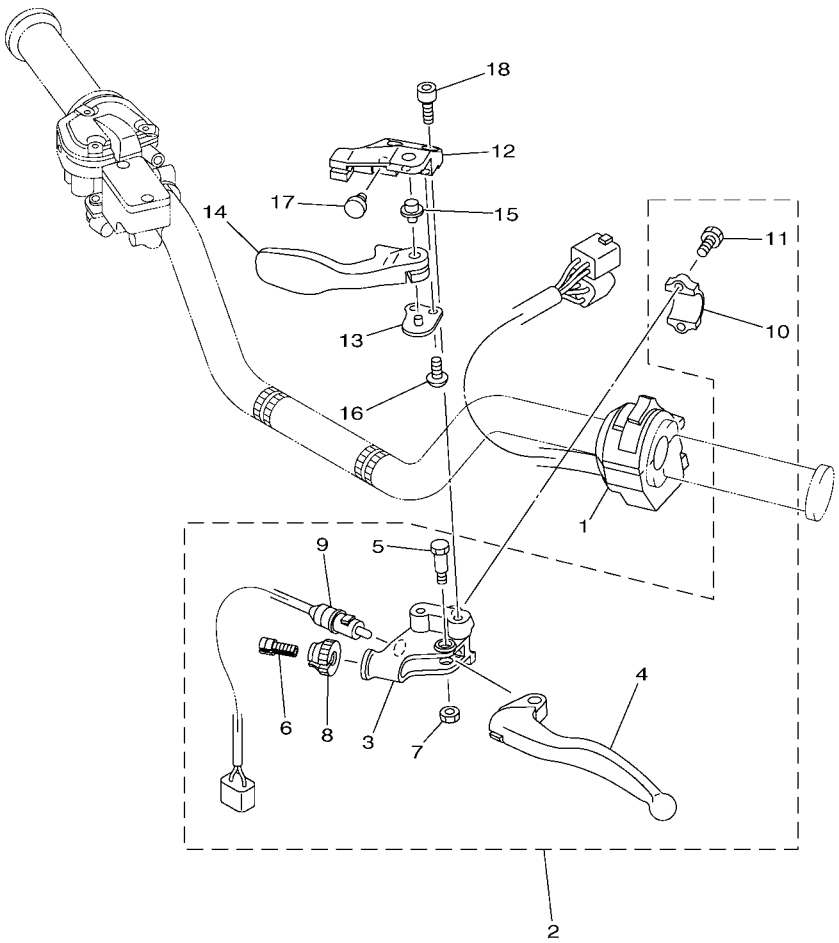

18P1100-H410

FIG. 40 HANDLE SWITCH & LEVER

REF. NO.	PART NO.	DESCRIPTION	USA					REMARKS
1	1S3–83973–11	SWITCH, HANDLE 3	1					
2	18P–82910–00	LEVER HOLDER ASSY (LEFT)	1					
3	5TG–82911–00	.HOLDER, LEVER 1	1					
4	5TJ–83912–00	.LEVER 1	1					
5	90109–06034	.BOLT	1					
6	5TA–26337–00	.BOLT, ADJUSTING	1					
7	95602–06100	.NUT, U	1					
8	5HD–83951–00	.BOLT, CABLE ADJUSTING	1					
9	5KM–82917–00	.SWITCH	1					
10	5TG–82913–00	.HOLDER, LEVER LOWER 1	1					
11	90101–05033	.BOLT	2					
12	5TG–25727–00	BRACKET, LEVER	1					
13	5D3–25689–00	PLATE, GUIDE	1					
14	5TG–25726–00	LEVER, BRAKE	1					
15	5TG–83923–00	COLLAR, LEVER 2	1					
16	92012–06014	BOLT, BUTTON HEAD	2					
17	90338–07007	PLUG	1					
18	92014–06016	BOLT, BUTTON HEAD	2					

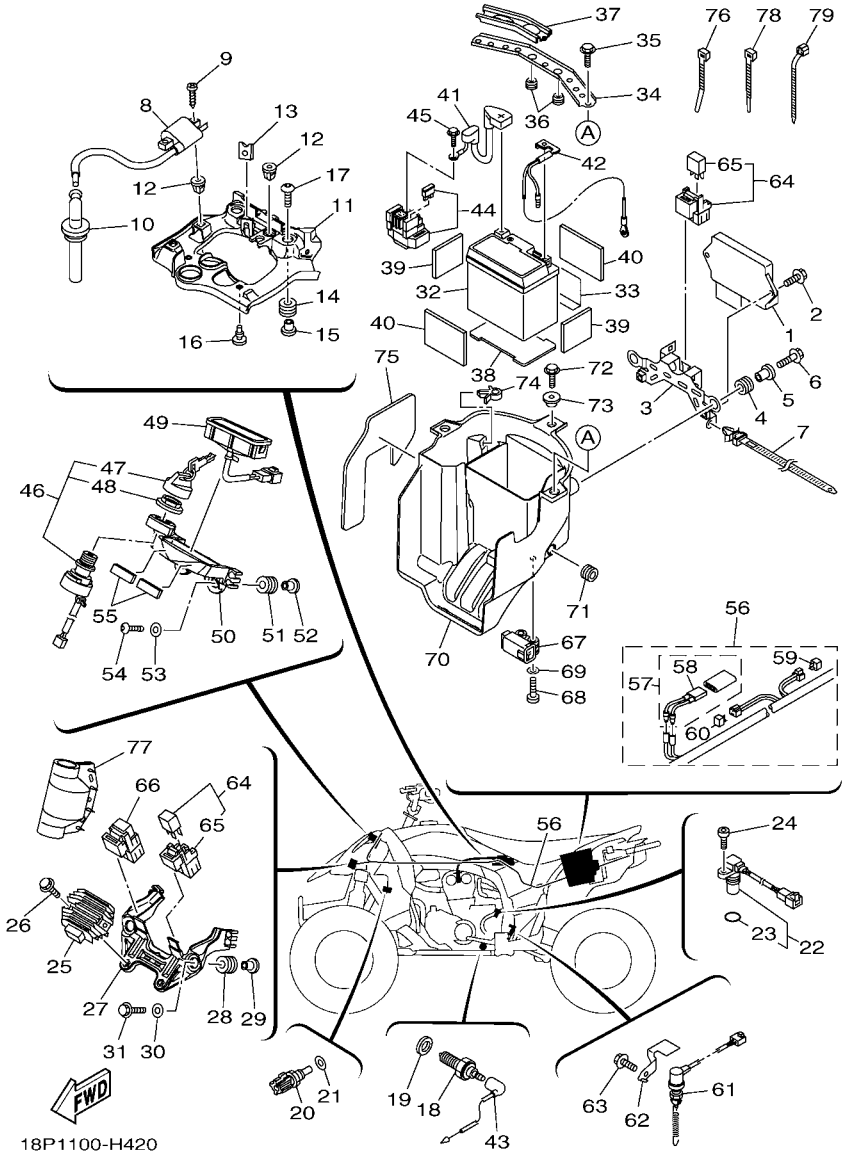

FIG. 41 ELECTRICAL 1

REF. NO.	PART NO.	DESCRIPTION	USA					REMARKS
1	18P–8591A–00	ENGINE CONTROL UNIT ASSY	1					
2	95812–06016	BOLT, FLANGE	2					
3	18P–85991–00	BRACKET, UNIT	1					
4	90480–14011	GROMMET	2					
5	90387–06388	COLLAR	2					
6	95812–06020	BOLT, FLANGE	2					
7	90464–12036	CLAMP	1					
8	18P–82310–00	IGNITION COIL ASSY	1					
9	97702–60125	SCREW, TAPPING	2					
10	18P–82370–00	PLUG CAP ASSY	1					
11	18P–81948–00	BRACKET	1					
12	90338–08226	PLUG	3					
13	90183–060A6	NUT, SPRING	1					
14	90480–14323	GROMMET	2					
15	90387–06161	COLLAR	2					
16	90338–05008	PLUG	2					
17	90111–06084	BOLT,HEX. SOCKET BUTTON	2					
18	3GB–82540–01	NEUTRAL SWITCH ASSY	1					
19	90430–10148	GASKET	1					
20	8CC–85790–01	THERMOSENSOR ASSY	1					
21	90430–12202	GASKET	1					
22	18P–83755–00	SENSOR, SPEED	1					
23	4D9–81168–00	.O-RING	1					
24	91312–06016	BOLT	1					
25	5BN–81960–00	RECTIFIER & REGULATOR ASSY	1					
26	95802–06020	BOLT, FLANGE	2					
27	18P–87208–00	STAY, REGULATOR	1					

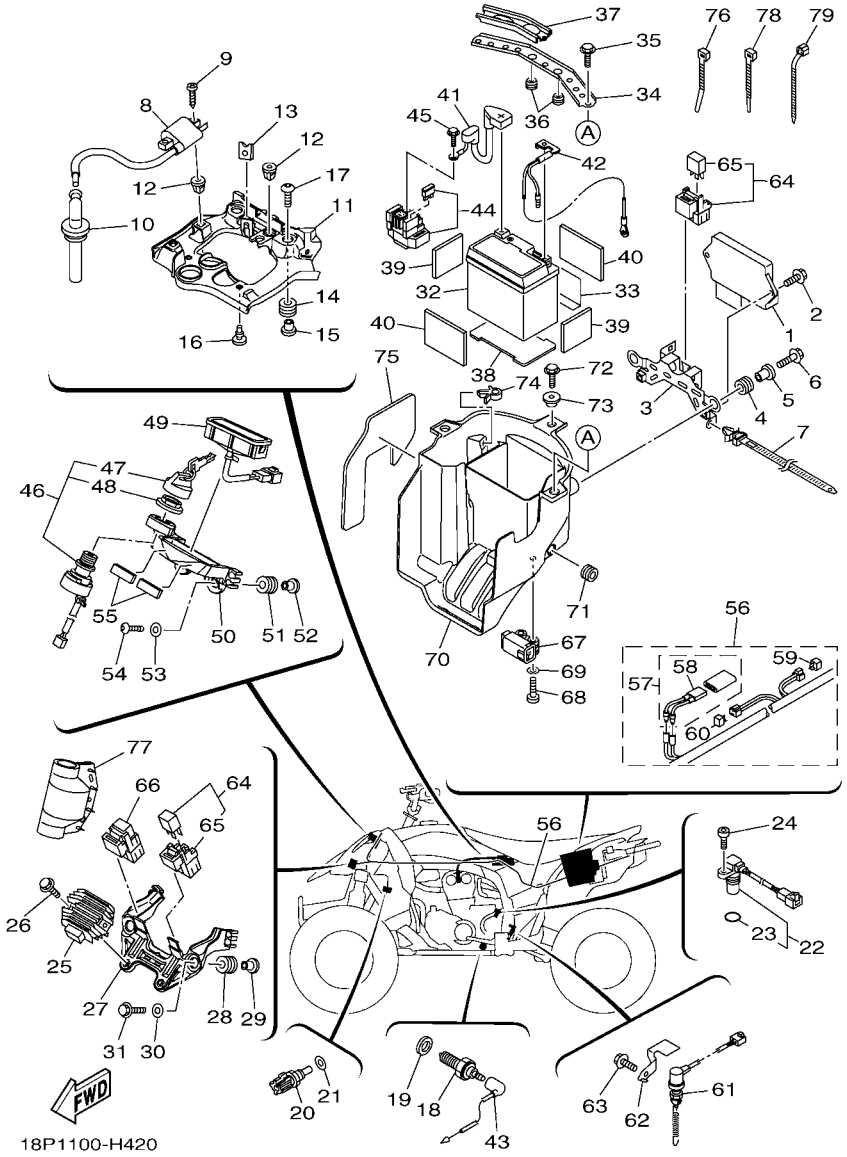

FIG. 41 ELECTRICAL 1

REF. NO.	PART NO.	DESCRIPTION	USA					REMARKS
28	90480–10289	GROMMET	2					
29	90387–06204	COLLAR	2					
30	90201–06078	WASHER, PLATE	2					
31	95802–06025	BOLT, FLANGE	2					
32	1S4–82100–10	BATTERY ASSY (YT Z7S)	1					
33	18P–82122–00	SEAT, BATTERY	1					
34	18P–82128–00	BRACKET, BATTERY	1					
35	90105–06084	BOLT, FLANGE	2					
36	90338–12192	PLUG	2					
37	18P–82129–00	COVER, BATTERY	1					
38	4D3–82122–00	SEAT, BATTERY	1					
39	5MP–21747–00	DAMPER	2					
40	4HC–27415–00	PLATE, FOOTREST	2					
41	18P–82115–00	WIRE, PLUS LEAD	1					
42	18P–82116–00	WIRE, MINUS LEAD	1					
43	18P–82541–00	WIRE, LEAD	1					
44	18P–81940–00	STARTER RELAY ASSY	1					
45	95022–06008	BOLT, FLANGE	2					
46	4SH–82510–00	MAIN SWITCH ASSY	1					
47	3HN–82579–00	.CAP, KEY	1					
48	3HN–82569–00	.NUT, MAIN SWITCH	1					
49	18P–83530–00	PILOT LIGHT ASSY	1					
50	18P–8361L–00	BRACKET, INDICATOR	1					
51	90480–10289	GROMMET	2					
52	90387–06204	COLLAR	2					
53	90201–06078	WASHER, PLATE	2					
54	92012–06025	BOLT, BUTTON HEAD	2					

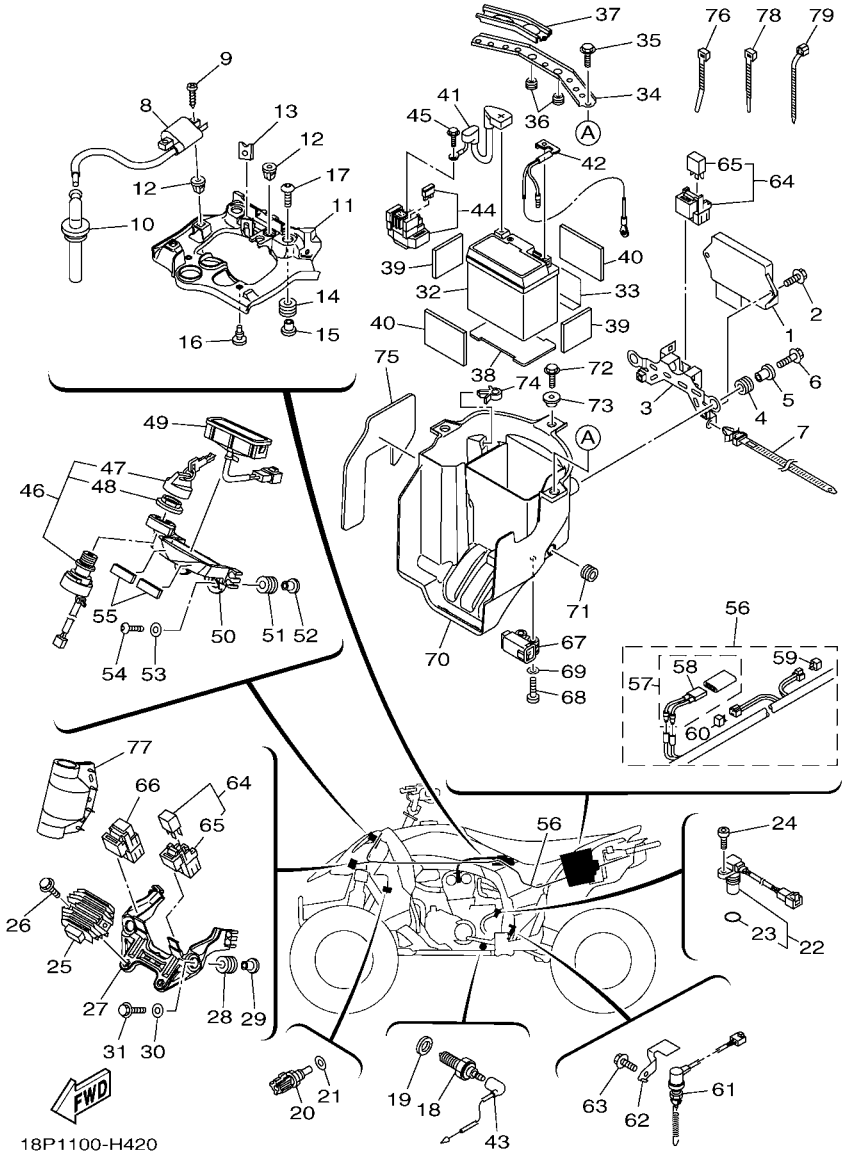

FIG. 41 ELECTRICAL 1

REF. NO.	PART NO.	DESCRIPTION	USA					REMARKS
55	2C0–28372–00	DAMPER	2					
56	18P–82590–00	WIRE HARNESS ASSY	1					
57	5ND–82180–00	.CIRCUIT BREAKER ASSY	1					
58	5ND–82560–00	..THERMO SWITCH ASSY	1					
59	4WA–81980–00	.DIODE ASSY	1					
60	3WP–81980–00	.DIODE ASSY	1					
61	18P–82530–00	STOP SWITCH ASSY	1					
62	18P–8246B–00	COVER 1	1					
63	95022–06010	BOLT, FLANGE	1					
64	5EA–81950–20	RELAY ASSY	2					
65	5EA–81952–00	.HOLDER, RELAY	1					
66	5DM–81950–00	RELAY ASSY (G8HN-1C4T-DJ-Y52)	1					
67	5PS–82576–01	LEAN ANGLE SENSOR	1					
68	91312–04025	BOLT	2					
69	90201–04030	WASHER, PLATE	2					
70	18P–8212B–00	BOX, BATTERY 1	1					
71	90480–12007	GROMMET	2					
72	90105–06084	BOLT, FLANGE	1					
73	90387–06153	COLLAR	1					
74	90464–05222	CLAMP	1					
75	18P–8254E–00	INSULATOR	1					
76	90465–10098	CLAMP	1					
77	5RU–8252U–00	COVER	1					
78	90465–13M11	CLAMP	1					
79	90464–13073	CLAMP	2					

DPBSE

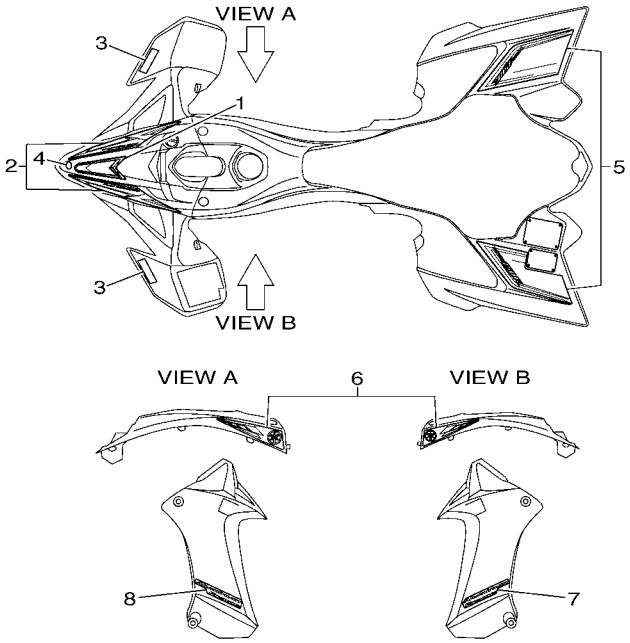

BWS1

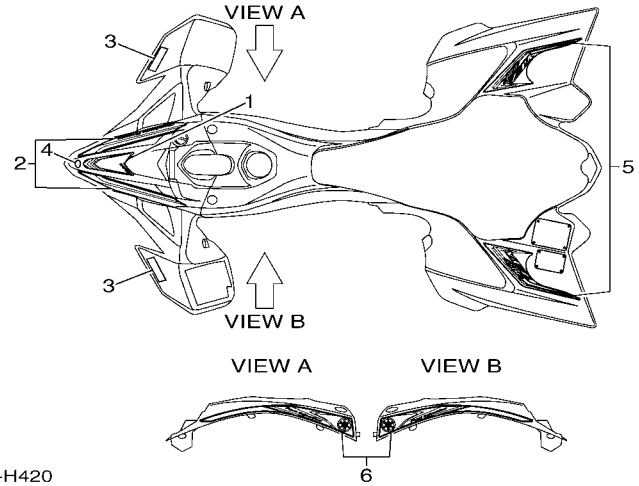

18P1110-H420

FIG. 42 GRAPHICS

REF. NO.	PART NO.	DESCRIPTION	USA					REMARKS
1	18P–21569–00	GRAPHIC, 1	1					UR FOR DPBSE
	18P–21569–10	GRAPHIC, 1	1					UR FOR BWS1
2	18P–2159A–00	GRAPHIC SET 1	1					UR FOR DPBSE
	18P–2159A–10	GRAPHIC SET 1	1					UR FOR BWS1
3	4ES–2153E–40	EMBLEM, YAMAHA	2					UR FOR DPBSE
	4ES–2153E–20	EMBLEM, YAMAHA	2					UR FOR BWS1
4	4KN–2836B–10	TUNING FORK MARK	1					
5	18P–2165A–00	GRAPHIC SET,REAR FENDER	1					UR FOR DPBSE
	18P–2165A–20	GRAPHIC SET,REAR FENDER	1					UR FOR BWS1
6	18P–2173L–00	GRAPHIC SET 1	1					UR FOR DPBSE
	18P–2173L–10	GRAPHIC SET 1	1					UR FOR BWS1
7	18P–21781–00	EMBLEM 1	1					UR FOR DPBSE
8	18P–21782–00	EMBLEM 2	1					UR FOR DPBSE

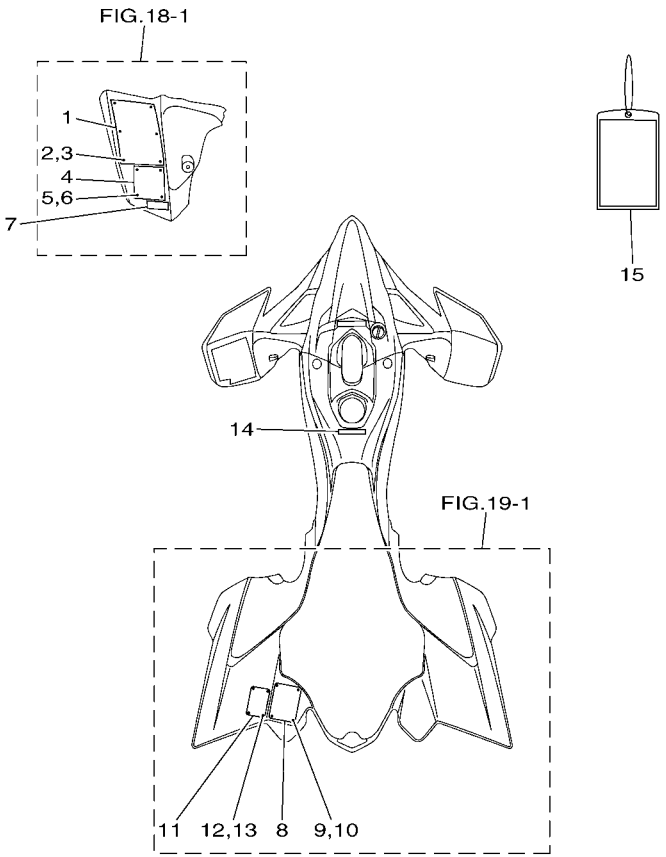

18P1110-H430

FIG. 43 EMBLEM & LABEL 1

REF. NO.	PART NO.	DESCRIPTION	USA					REMARKS
1	5FE–21568–01	LABEL, WARNING	1					ENGLISH
2	90267–32004	RIVET, BLIND	6					
3	90201–03008	WASHER, PLATE	6					
4	4D3–2816L–00	LABEL, WARNING AGE	1					ENGLISH
5	90267–32004	RIVET, BLIND	4					
6	90201–03008	WASHER, PLATE	4					
7	4D3–2817J–00	PLATE, ANSI SVIA	1					ENGLISH
8	5D3–2816M–U0	LABEL, WARNING TIRE & LOAD	1					ENGLISH
9	90267–32004	RIVET, BLIND	4					
10	90201–03008	WASHER, PLATE	4					
11	5FE–2151H–01	LABEL 5	1					ENGLISH
12	90267–32004	RIVET, BLIND	4					
13	90201–03008	WASHER, PLATE	4					
14	5PW–2415E–11	LABEL, CAUTION	1					ENGLISH
15	5LP–2819R–10	TAG, WARNING	1					

PART NO.	REF. NO.
18P–11102–00	1 – 1
5VY–1111G–00	1 – 19
5TA–11133–10	1 – 2
5TA–11134–10	1 – 3
18P–11166–00	1 – 21
18P–11167–00	1 – 20
2S2–11181–00	1 – 13
2S2–11190–20	1 – 16
2S2–11193–00	1 – 23
2S2–11311–10	1 – 24
2S2–11351–00	1 – 25
18P–11395–00	1 – 28
18P–11400–00	2 – 1
18P–11412–00	2 – 2
18P–11422–00	2 – 3
18P–11454–00	2 – 14
18P–11455–00	2 – 10
18P–11531–00	2 – 11
18P–11536–00	2 – 8
5TG–11603–00	2 – 19
5TG–11631–11	2 – 18
5TG–11633–10	2 – 20
18P–11651–00	2 – 6
18P–11681–00	2 – 4
5TA–12111–00	3 – 1
5TA–12112–00	3 – 2
5TJ–12113–00	3 – 5
5TA–12114–00	3 – 6
4GY–12117–00	3 – 8
5BE–12117–00	3 – 7
1AA–12118–00	3 – 9
1WG–12118–00	3 – 10
33M–12119–00	3 – 11
4SV–12119–00	3 – 12
5TA–12121–00	3 – 3
3GM–12126–00	3 – 4
3FV–12153–10	3 – 14
3LD–12168–00	3 – 13
3LD–12168–20	3 – 13
3LD–12168–40	3 – 13
3LD–12168–60	3 – 13
3LD–12168–80	3 – 13
3LD–12168–A0	3 – 13
3LD–12168–F0	3 – 13
3LD–12168–H1	3 – 13
3LD–12168–K1	3 – 13
3LD–12168–M1	3 – 13
3LD–12168–R1	3 – 13

PART NO.	REF. NO.
3LD–12168–U1	3 – 13
3LD–12168–W1	3 – 13
3LD–12168–Y1	3 – 13
3LD–12169–11	3 – 13
3LD–12169–31	3 – 13
3LD–12169–50	3 – 13
3LD–12169–70	3 – 13
3LD–12169–90	3 – 13
3LD–12169–E0	3 – 13
3LD–12169–G0	3 – 13
3LD–12169–J0	3 – 13
3LD–12169–L0	3 – 13
3LD–12169–N0	3 – 13
3LD–12169–T0	3 – 13
18P–12170–00	4 – 1
18P–12180–00	4 – 2
5TA–12210–10	4 – 5
4FM–12213–00	4 – 6
18P–12233–00	4 – 12
5BE–12241–00	1 – 17
2S2–12251–00	4 – 9
18P–12252–00	4 – 10
18P–12405–00	6 – 2
18P–1240A–00	6 – 1
18P–12422–00	5 – 6
18P–12428–00	5 – 7
4C8–12438–00	5 – 3
18P–12450–00	5 – 1
5SL–12462–00	6 – 5
18P–12467–00	20 – 13
5TG–12481–00	6 – 6
5BE–12564–00	12 – 55
18P–12576–00	6 – 9
18P–12577–00	6 – 10
18P–12671–00	6 – 4
2S3–12675–00	6 – 3
583–13113–00	12 – 38
18P–13160–00	9 – 4
18P–13300–00	7 – 1
5TA–13320–00	7 – 2
18P–13341–00	7 – 9
2S2–13342–00	7 – 7
18P–13411–00	7 – 13
18P–13412–01	7 – 12
18P–13421–00	7 – 16
5D3–13440–00	12 – 32
5BE–13447–10	12 – 33
18P–13543–00	9 – 15

PART NO.	REF. NO.
8FP–13556–00	9 – 2
18P–13597–00	8 – 1
18P–13750–00	9 – 1
3B4–13761–00	9 – 3
18P–13843–00	8 – 7
18P–13907–00	25 – 15
18P–13971–00	25 – 21
8FP–14137–00	9 – 14
2H0–14147–00	9 – 13
5LP–14147–00	9 – 10
1UY–14155–00	9 – 12
1S3–14161–00	9 – 11
8CC–14216–10	9 – 5
18P–14348–00	9 – 16
18P–14409–00	8 – 28
18P–14411–00	8 – 8
18P–14412–00	8 – 16
18P–1442F–00	8 – 19
18P–14435–00	8 – 29
5GH–14436–00	8 – 12
5TG–14451–00	8 – 13
5KM–14452–00	8 – 17
18P–14453–00	8 – 11
59V–14457–00	8 – 24
5TG–14458–00	8 – 14
5D3–14459–00	8 – 22
4ES–14462–00	8 – 23
18P–14479–00	8 – 15
5YP–14562–00	9 – 8
18P–14611–00	10 – 1
3VD–14613–01	10 – 6
18P–14628–00	10 – 2
18P–14710–00	10 – 8
8FA–14714–10	10 – 9
18P–14718–00	10 – 10
5BE–14788–00	10 – 14
5JW–14945–00	9 – 7
18P–15100–00	11 – 1
2S2–15155–10	11 – 3
18P–1531A–00	8 – 35
18P–1532A–00	8 – 37
18P–15362–00	12 – 6
18P–15370–00	8 – 33
18P–15378–00	11 – 25
4JT–15381–01	11 – 11
18P–15383–00	11 – 12
2S2–15388–00	11 – 15
18P–15393–00	12 – 47

PART NO.	REF. NO.
18P–15411–00	12 – 1
18P–15413–00	12 – 52
5TG–15415–00	12 – 25
18P–1541A–00	12 – 53
18P–15421–00	12 – 18
18P–15423–00	12 – 12
18P–15431–00	12 – 21
5TA–15441–01	12 – 16
18P–15451–00	12 – 8
18P–15453–00	12 – 26
18P–15462–00	12 – 41
18P–15463–00	12 – 13
18P–15484–00	12 – 51
18P–15515–00	13 – 5
18P–15517–00	13 – 4
18P–15521–00	13 – 3
18P–15560–00	13 – 1
5TJ–15590–00	13 – 6
2S2–16111–60	14 – 1
18P–16150–00	14 – 4
5XD–16154–00	14 – 12
5TA–16321–00	14 – 8
5VY–16321–00	14 – 9
4X7–16325–00	14 – 7
18P–16342–00	14 – 22
2S2–16351–00	14 – 6
5TG–16356–00	14 – 15
18P–16357–00	14 – 20
5TA–16371–10	14 – 5
18P–16382–00	14 – 21
18P–17121–00	15 – 8
18P–17131–00	15 – 7
18P–17141–00	15 – 6
18P–17151–00	15 – 3
18P–17211–00	15 – 21
18P–17221–00	15 – 12
18P–17231–00	15 – 15
18P–17241–00	15 – 19
18P–17251–00	15 – 20
18P–17402–00	15 – 11
18P–17411–00	15 – 2
18P–17460–00	15 – 27
18P–17466–00	12 – 19
1S3–17471–00	15 – 30
18P–18101–00	16 – 13
18P–18110–00	16 – 26
5YT–18113–00	16 – 27
18P–18122–00	16 – 20

PART NO.	REF. NO.
2S2–18140–10	16 – 4
5BE–18172–00	16 – 24
3XJ–18173–10	16 – 18
3XJ–18178–00	16 – 19
3XJ–18182–00	16 – 21
3XJ–18184–00	16 – 23
2S2–18185–00	16 – 3
18P–18511–00	16 – 8
18P–18512–00	16 – 9
18P–18513–00	16 – 10
18P–18531–00	16 – 11
1WG–18531–01	16 – 12
18P–18541–00	16 – 1
2S2–18562–00	11 – 16
18P–21101–09	17 – 1
18P–21101–19	17 – 1
18P–2111A–00	17 – 33
18P–21131–00	17 – 37
18P–21190–09	17 – 2
18P–21190–19	17 – 2
18P–21315–00	17 – 6
18P–21316–00	17 – 11
18P–21317–00	17 – 12
18P–21335–00	17 – 34
18P–21336–00	17 – 35
18P–2133H–00	17 – 4
18P–21471–00	17 – 19
18P–21513–00	18 – 6
18P–21514–00	18 – 7
5FE–2151H–01	43 – 11
4ES–2153E–20	42 – 3
4ES–2153E–40	42 – 3
5FE–21568–01	43 – 1
18P–21569–00	42 – 1
18P–21569–10	42 – 1
18P–2159A–00	42 – 2
18P–2159A–10	42 – 2
18P–21621–00	19 – 18
4XY–21638–00	17 – 39
18P–2163A–00	19 – 39
18P–2163E–00	19 – 16
18P–2163F–00	19 – 17
18P–21643–00	19 – 8
18P–21644–00	19 – 10
18P–2164F–00	19 – 19
18P–2164G–00	19 – 27
18P–2164H–00	19 – 20
18P–2164J–00	19 – 28

PART NO.	REF. NO.
18P–21652–00	19 – 15
18P–2165A–00	42 – 5
18P–2165A–20	42 – 5
18P–21691–00	19 – 26
18P–21711–00	20 – 19
41R–21717–00	17 – 20
18P–2171A–00	20 – 15
18P–2171A–10	20 – 15
3YX–2171L–00	17 – 43
18P–21721–00	20 – 20
18P–21731–10	20 – 22
18P–2173L–00	42 – 6
18P–2173L–10	42 – 6
18P–2173T–00	19 – 7
18P–2173U–00	19 – 6
18P–21741–10	20 – 23
5MP–21747–00	41 – 39
18P–2177C–00	8 – 32
2S2–2177M–00	17 – 40
18P–21781–00	42 – 7
18P–21782–00	42 – 8
26H–21828–00	20 – 4
18P–21871–00	20 – 1
18P–21875–00	20 – 3
18P–22110–00	21 – 1
4X7–22129–00	21 – 8
55K–22129–00	21 – 23
	21 – 32
18P–22141–00	21 – 10
3YF–22149–00	21 – 7
1C3–2214F–00	17 – 41
18P–22151–00	21 – 36
5TG–22153–10	21 – 39
5TG–22178–00	17 – 22
18P–2217A–00	21 – 16
18P–2217F–00	21 – 28
18P–22210–00	22 – 1
4AA–22259–80	22 – 2
	24 – 29
18P–22361–00	21 – 38
5TG–22475–00	21 – 15
18P–2247A–00	25 – 13
1S3–23147–01	21 – 49
18P–23317–00	34 – 32
18P–23350–00	24 – 28
18P–23441–00	23 – 11
18P–23442–10	23 – 12
18P–23501–00	24 – 37

PART NO.	REF. NO.
18P–23502–00	24 – 38
5YT–23517–00	24 – 18
	24 – 19
18P–23540–00–33	24 – 7
18P–23540–00–P0	24 – 7
18P–23550–00–33	24 – 10
18P–23550–00–P0	24 – 10
18P–23570–00–33	24 – 1
18P–23570–00–P0	24 – 1
5LP–23579–00	24 – 2
	24 – 5
	24 – 8
	24 – 11
18P–23580–00–33	24 – 4
18P–23580–00–P0	24 – 4
1UY–23812–00	23 – 16
18P–23813–00	23 – 1
18P–23816–00	23 – 2
18P–23831–00	23 – 3
1S3–23841–20	23 – 4
1S3–23845–20	23 – 5
1UY–23868–01	23 – 18
5GT–23872–00	17 – 30
1UY–23894–01	23 – 20
18P–24110–00	25 – 1
18P–2414H–00	25 – 12
5PW–2415E–11	43 – 14
1S3–24486–00	25 – 17
18P–24491–00	25 – 16
5KM–24610–00	25 – 2
18P–2464V–00	25 – 19
18P–2467E–00	25 – 20
18P–2470F–00	26 – 2
18P–2470F–10	26 – 2
18P–24710–00	26 – 1
18P–24710–10	26 – 1
18P–24723–00	26 – 7
3KJ–24723–00	17 – 38
214–24724–00	26 – 4
18P–24725–00	26 – 6
22W–24741–00	20 – 16
	26 – 5
18P–2476U–00	19 – 2
18P–2476V–00	19 – 3
1S3–25111–00	27 – 7
5LP–25117–00	27 – 9
1S3–25127–00	27 – 22
5TG–2514A–00	28 – 32

PART NO.	REF. NO.
5LP–25180–21	27 – 1
	27 – 4
5TG–25311–20	21 – 45
5TG–25317–00	21 – 48
18P–25381–00	29 – 17
18P–25383–00	29 – 4
18P–25386–00	29 – 11
5LP–25390–21	29 – 1
18P–25415–00	29 – 21
5TG–25438–10	29 – 12
5D3–25689–00	40 – 13
18P–25712–00	29 – 15
5TG–25721–20	21 – 50
5TG–25726–00	40 – 14
5TG–25727–00	40 – 12
1S3–2580E–00	34 – 1
5TG–2580T–11	28 – 3
5TG–2580U–11	28 – 17
5TG–2580W–20	30 – 3
1S3–25828–00	28 – 16
	28 – 30
1AE–2582A–00	34 – 3
3GD–2582T–10	28 – 1
1S3–2582W–20	30 – 1
5MV–25833–00	32 – 7
5UG–25833–00	30 – 7
5D3–2583T–00	32 – 1
5D3–25852–00	32 – 4
3XP–25852–50	34 – 20
2VN–25854–00	34 – 21
4TT–25854–00	32 – 3
2VN–25855–00	34 – 22
2GU–25866–00	32 – 20
5LP–25867–00	32 – 6
18P–25871–00	32 – 17
18P–25872–00	32 – 12
18P–25873–00	32 – 13
18P–25874–00	34 – 27
18P–25875–00	32 – 14
18P–25876–00	32 – 15
18P–25886–00	34 – 30
5JJ–25894–00	34 – 19
18P–25895–00	34 – 16
18P–25897–00	34 – 23
5MV–2589F–00	32 – 11
4NK–2589H–00	32 – 5
3SP–25914–51	30 – 16
3JD–25917–00	28 – 7

PART NO.	REF. NO.
3JD–25917–00	28 – 21
	30 – 17
3JD–25919–00	28 – 8
	28 – 22
5TG–25924–00	28 – 15
	28 – 29
3JD–25926–00	28 – 12
	28 – 26
1UY–25926–51	28 – 10
	28 – 24
3SP–25926–51	30 – 18
5DH–25933–00	30 – 14
3LD–25934–01	30 – 12
1UY–25937–51	28 – 6
	28 – 20
	30 – 15
1UY–25938–51	28 – 11
	28 – 25
3JD–25961–00	28 – 13
	28 – 27
5TG–25972–00	30 – 11
1UY–25973–51	30 – 10
1UY–25974–51	30 – 9
5TG–25975–00	30 – 6
5TG–25977–50	30 – 20
5TG–25978–00	30 – 8
5D3–26111–10	31 – 1
18P–26124–00	31 – 30
1NV–26129–00	31 – 16
5D3–26219–10	31 – 31
18P–2622H–00	31 – 5
5LP–26241–00	31 – 4
1S3–26250–00	31 – 7
1UY–26259–00	31 – 25
1NV–26259–01	31 – 13
1S3–2625G–00	31 – 17
1NV–2625K–00	31 – 14
1S3–2628F–00	31 – 8
1S3–2628G–00	31 – 9
1NV–26304–00	31 – 12
18P–26311–00	31 – 24
18P–26335–00	31 – 27
5TA–26337–00	40 – 6
18P–26341–00	31 – 29
1C3–26342–50	31 – 28
5TG–26372–00	31 – 26
1NV–26398–00	31 – 11
371–27114–00	26 – 3

PART NO.	REF. NO.
18P–27211–00	33 – 8
18P–27217–00	33 – 9
4SS–27218–00	34 – 8
2YK–27222–00	34 – 9
18P–27263–00	34 – 25
18P–27411–00	33 – 1
4HC–27415–00	41 – 40
18P–27421–00	33 – 4
18P–2743E–00	34 – 31
18P–27453–00	34 – 11
18P–28100–00	17 – 47
1NV–2811A–01	17 – 48
4D3–2816L–00	43 – 4
5D3–2816M–U0	43 – 8
4D3–2817J–00	43 – 7
5LP–2819R–10	43 – 15
18P–28215–00	35 – 9
5TG–28215–00	35 – 8
4XY–28347–00	17 – 42
4KN–2836B–10	42 – 4
2C0–28372–00	41 – 55
18P–2845N–00	35 – 1
18P–2845R–00	35 – 3
4D9–81168–00	41 – 23
18P–81410–00	36 – 1
18P–81450–00	36 – 2
18P–81528–00	36 – 3
18P–81801–00	37 – 2
18P–81815–00	37 – 7
18P–81826–00	37 – 3
4XV–8182A–00	37 – 6
	37 – 8
4B5–81844–00	37 – 4
1FK–81847–00	37 – 5
18P–81890–00	37 – 1
18P–81940–00	41 – 44
18P–81948–00	41 – 11
5DM–81950–00	41 – 66
5EA–81950–20	41 – 64
5EA–81952–00	41 – 65
5BN–81960–00	41 – 25
3WP–81980–00	41 – 60
4WA–81980–00	41 – 59
1S4–82100–10	41 – 32
18P–82115–00	41 – 41
18P–82116–00	41 – 42
18P–82122–00	41 – 33
4D3–82122–00	41 – 38

PART NO.	REF. NO.
18P–82128–00	41 – 34
18P–82129–00	41 – 37
18P–8212B–00	41 – 70
5ND–82180–00	41 – 57
18P–82310–00	41 – 8
18P–82370–00	41 – 10
5S7–82380–00	8 – 4
18P–8246B–00	41 – 62
4SH–82510–00	41 – 46
5RU–8252U–00	41 – 77
18P–82530–00	41 – 61
3GB–82540–01	41 – 18
18P–82541–00	41 – 43
18P–8254E–00	41 – 75
5ND–82560–00	41 – 58
3HN–82569–00	41 – 48
5PS–82576–01	41 – 67
3HN–82579–00	41 – 47
18P–82590–00	41 – 56
18P–82910–00	40 – 2
5TG–82911–00	40 – 3
4V4–82913–00	31 – 21
5TG–82913–00	40 – 10
5KM–82917–00	40 – 9
18P–83530–00	41 – 49
18P–8361L–00	41 – 50
18P–83755–00	41 – 22
5TJ–83912–00	40 – 4
5D3–83922–00	32 – 8
5TG–83923–00	40 – 15
437–83936–01	31 – 32
5HD–83951–00	40 – 8
1S3–83973–11	40 – 1
5D3–83980–00	32 – 10
5TG–84110–03	38 – 2
18P–8411K–00	39 – 6
5TG–84140–01	38 – 4
18P–84165–00	38 – 3
18P–84166–00	38 – 11
5TG–84310–03	38 – 10
4KB–84314–01	38 – 1
	38 – 9
5TG–84340–01	38 – 12
1S3–84710–01	39 – 1
18P–84716–00	39 – 5
8CC–85790–01	41 – 20
3B4–85885–00	9 – 6
8FP–85886–00	8 – 9

PART NO.	REF. NO.
18P–8591A–00	41 – 1
18P–85991–00	41 – 3
18P–87208–00	41 – 27
5D3–W0041–00	32 – 2
1S3–W0042–50	34 – 2
5TG–W0045–20	28 – 14
5TG–W0045–30	28 – 28
5TG–W0046–10	30 – 13
5TG–W0047–00	30 – 5
3LC–W0047–50	28 – 5
	28 – 19
1UY–W0048–50	28 – 9
	28 – 23
	30 – 19
5TG–W0057–00	28 – 4
	28 – 18
5TG–W0057–10	30 – 4
18P–W2151–00	18 – 1
18P–W2151–10	18 – 1
18P–W2161–00	19 – 1
18P–W2161–10	19 – 1
90101–05033	40 – 11
90101–06041	16 – 25
90102–12005	22 – 7
90105–06027	1 – 4
90105–06063	34 – 33
90105–06081	11 – 17
90105–06084	8 – 31
	17 – 45
	41 – 35
	41 – 72
90105–08112	17 – 26
90105–08129	10 – 15
90105–08154	23 – 13
90105–08184	28 – 31
90105–10135	24 – 20
90105–10148	17 – 17
90105–10163	1 – 14
90105–101A9	30 – 21
90105–10301	24 – 21
90105–10339	24 – 30
90105–10350	17 – 15
90105–10351	24 – 33
90105–12038	22 – 3
90105–12064	21 – 24
90105–12065	21 – 26
90105–12066	21 – 33
90108–05001	33 – 12

PART NO.	REF. NO.
90109–06031	16 – 28
90109–06034	40 – 5
90109–06172	20 – 27
	21 – 37
90109–06198	16 – 6
	17 – 21
90109–06199	18 – 10
90109–06203	1 – 18
90109–06249	19 – 40
90109–067F4	32 – 16
90109–08082	28 – 2
90109–10013	29 – 13
90110–06168	4 – 13
	13 – 7
	36 – 4
	36 – 6
90110–06169	36 – 5
90110–06208	7 – 14
90110–06228	12 – 36
90110–10029	17 – 9
90110–12001	21 – 54
90111–06038	18 – 3
	19 – 13
	20 – 17
90111–06084	20 – 26
	41 – 17
90113–06055	29 – 20
90114–10006	27 – 8
90114–10013	29 – 5
90116–08022	1 – 11
90119–06152	20 – 2
90119–06177	34 – 24
90119–06181	6 – 15
90122–06010	8 – 27
90149–04278	31 – 18
90149–06069	2 – 15
	7 – 8
90149–06074	11 – 14
90149–08044	30 – 2
90149–10034	17 – 3
90151–08003	11 – 13
90154–05013	19 – 21
	19 – 29
90154–06014	28 – 33
90159–06010	14 – 11
90170–12054	23 – 7
90170–12055	23 – 6
90170–14171	2 – 12

PART NO.	REF. NO.
90170–20327	14 – 14
90171–10001	23 – 8
	24 – 40
90171–14002	27 – 20
90171–16002	29 – 9
90179–12657	36 – 7
90179–20009	14 – 3
90179–22018	15 – 29
90179–38001	29 – 18
90183–060A6	41 – 13
90183–061A5	18 – 2
	18 – 8
	19 – 12
	20 – 24
	35 – 10
90185–10011	17 – 16
	17 – 18
	29 – 14
90185–10012	24 – 24
	24 – 25
	24 – 31
	24 – 35
90185–12002	21 – 25
	21 – 27
	22 – 5
	23 – 14
90185–12007	21 – 34
90185–14009	23 – 23
90185–16002	21 – 12
90201–03008	19 – 5
	43 – 3
	43 – 6
	43 – 10
	43 – 13
90201–04027	21 – 41
90201–04028	8 – 21
90201–04030	41 – 69
90201–05015	10 – 3
	10 – 12
90201–06013	16 – 7
90201–06033	18 – 4
	21 – 44
	25 – 5
	25 – 8
90201–06076	19 – 25
	19 – 33
90201–06078	38 – 8
	38 – 16

PART NO.	REF. NO.
90201–06078	41 – 30
	41 – 53
90201–06085	18 – 5
	19 – 14
	20 – 18
90201–08043	17 – 24
	19 – 38
90201–08048	10 – 16
	19 – 35
90201–08053	17 – 8
90201–08077	33 – 10
90201–08083	34 – 14
90201–10025	1 – 15
90201–10032	14 – 23
90201–10035	24 – 32
90201–10036	17 – 10
90201–10037	24 – 22
	24 – 23
	24 – 36
90201–10043	17 – 14
90201–10118	32 – 22
	34 – 28
90201–12020	36 – 8
90201–12032	21 – 35
	22 – 4
90201–12034	22 – 8
	23 – 15
90201–12166	7 – 11
90201–125L6	14 – 17
90201–127E1	16 – 15
90201–14021	23 – 22
90201–14586	27 – 19
90201–15701	12 – 23
90201–16018	21 – 11
90201–16023	29 – 8
90201–20022	27 – 17
90201–20276	15 – 22
90201–22015	15 – 28
90208–25045	14 – 2
90208–39001	29 – 19
90209–06096	8 – 26
90209–10229	23 – 9
	24 – 39
90209–23012	15 – 4
90209–26008	15 – 13
90214–26002	15 – 16
90214–26003	15 – 17
90215–14287	2 – 13

PART NO.	REF. NO.
90215–20005	14 – 13
90240–08124	34 – 13
90252–03001	29 – 10
90267–24143	31 – 3
90267–32004	19 – 4
	43 – 2
	43 – 5
	43 – 9
	43 – 12
90267–47187	21 – 40
90267–48025	8 – 20
90267–48176	17 – 5
90269–05001	17 – 36
90269–07010	20 – 21
90269–07076	20 – 14
90280–03006	2 – 17
90338–05008	41 – 16
90338–07007	40 – 17
90338–08226	41 – 12
90338–12192	41 – 36
90338–16007	17 – 32
90338–20183	17 – 31
90338–23004	21 – 9
90340–12007	1 – 5
90340–14003	12 – 4
90340–36001	12 – 2
90380–10002	11 – 4
90380–22111	21 – 3
90381–15088	24 – 13
	24 – 14
90387–02001	31 – 2
90387–06063	35 – 5
90387–06136	38 – 6
	38 – 14
90387–06151	21 – 43
90387–06153	41 – 73
90387–06161	41 – 15
90387–06170	20 – 25
90387–06197	17 – 46
90387–06204	39 – 3
	41 – 29
	41 – 52
90387–06205	19 – 23
	19 – 31
90387–06388	41 – 5
90387–066H4	25 – 4
90387–066J1	25 – 9
90387–07030	4 – 11

PART NO.	REF. NO.
90387–07391	6 – 14
90387–08073	8 – 30
90387–086N4	17 – 25
90387–090R0	23 – 21
90387–10043	24 – 17
	24 – 34
90387–10069	24 – 16
90387–101R3	24 – 15
90387–12041	21 – 21
90387–12042	21 – 30
90387–12043	21 – 19
90387–12046	22 – 6
90387–150R1	27 – 18
90387–16014	21 – 55
90387–16027	21 – 5
90387–160W1	21 – 6
90387–164N2	11 – 20
90387–17013	23 – 26
90387–176R6	23 – 25
90387–20005	27 – 16
90387–26005	15 – 18
90387–28009	15 – 25
90387–40001	29 – 16
90401–10015	32 – 21
	34 – 29
90430–06014	1 – 9
	4 – 8
	5 – 10
	11 – 27
90430–10148	11 – 10
	41 – 19
90430–12202	41 – 21
90445–07340	12 – 30
90445–08008	25 – 11
90445–09123	20 – 9
90445–09251	20 – 8
90445–11418	17 – 44
90450–32015	6 – 12
90450–54009	8 – 6
90450–58005	8 – 3
90450–99014	8 – 18
90461–10135	11 – 23
90462–10056	11 – 22
90464–05222	41 – 74
90464–08051	12 – 49
90464–12036	41 – 7
90464–13073	41 – 79
90464–15065	20 – 11

PART NO.	REF. NO.
90464–15157	39 – 7
90464–15M08	20 – 12
90464–16001	20 – 10
	31 – 33
90465–08127	12 – 45
90465–10098	41 – 76
90465–13M11	41 – 78
90467–070A0	12 – 31
90467–08003	20 – 6
	20 – 7
90467–11019	20 – 5
90467–11044	34 – 17
90467–12052	8 – 39
90467–14057	34 – 18
90467–140A6	8 – 36
	8 – 38
	12 – 50
90467–220A1	8 – 25
90467–23109	6 – 11
90468–100A1	1 – 22
90468–16191	33 – 11
90480–01559	18 – 9
90480–10289	35 – 4
	41 – 28
	41 – 51
90480–11006	31 – 6
90480–12007	41 – 71
90480–14011	41 – 4
90480–14102	38 – 5
	38 – 13
90480–14323	39 – 2
	41 – 14
90480–15058	6 – 13
90480–18004	25 – 3
90480–18290	25 – 7
90501–043E0	12 – 40
90501–052G5	16 – 22
90501–231E9	14 – 10
90506–25001	33 – 7
90508–16061	14 – 28
90508–26021	16 – 5
90508–32136	16 – 14
90520–08001	25 – 14
91312–04006	9 – 17
91312–04025	41 – 68
91312–06014	1 – 29
91312–06016	11 – 8
	11 – 24

PART NO.	REF. NO.
91312–06016	12 – 17
	12 – 48
	12 – 54
	41 – 24
91312–06020	8 – 2
	12 – 37
91312–06025	12 – 20
91312–06030	7 – 6
91312–06050	11 – 5
91312–06060	11 – 6
91312–06080	11 – 7
91314–08040	21 – 13
91401–16012	34 – 15
91402–20020	23 – 10
	24 – 41
91402–20025	23 – 24
91402–30025	22 – 9
	27 – 21
91808–16023	1 – 6
	1 – 7
92012–06014	40 – 16
92012–06025	41 – 54
92012–06030	19 – 22
	19 – 30
92012–06040	25 – 6
92012–08012	34 – 12
92012–08016	19 – 9
	19 – 11
92012–08020	19 – 37
92012–08035	34 – 10
92014–06016	40 – 18
92902–05100	31 – 23
92902–06200	10 – 13
92902–10200	27 – 15
	29 – 7
92903–08600	21 – 14
92906–04100	34 – 6
92906–04600	34 – 7
92990–06200	10 – 5
93101–12173	5 – 4
93101–14164	12 – 22
93102–12224	14 – 26
	16 – 17
93102–22216	27 – 13
93102–25081	17 – 28
93102–25099	17 – 29
93102–35393	15 – 24
93104–09025	31 – 15

PART NO.	REF. NO.
93105–26026	27 – 12
93106–22019	21 – 4
93106–48001	21 – 47
93109–17071	21 – 22
	21 – 31
93109–20001	21 – 18
93112–31011	23 – 17
93210–07135	12 – 35
93210–10197	11 – 19
93210–14369	12 – 5
93210–15620	34 – 4
93210–16500	6 – 8
93210–19026	12 – 7
93210–19758	12 – 56
93210–25001	15 – 26
93210–357A3	12 – 3
93210–37003	29 – 22
93210–47675	12 – 34
93210–66001	21 – 52
93210–71001	21 – 51
93300–60804	17 – 23
93304–20812	21 – 46
93306–00106	5 – 5
93306–00426	15 – 10
93306–00446	27 – 10
93306–20231	27 – 11
93306–20332	15 – 9
93306–20352	17 – 27
93306–20353	2 – 9
93306–20532	15 – 1
93306–27803	15 – 23
93306–30644	2 – 7
93306–90509	16 – 2
93310–11268	13 – 2
93310–73606	2 – 5
93311–62574	2 – 16
93315–31758	21 – 20
	21 – 29
93315–32056	21 – 17
93317–11287	14 – 25
93317–22237	21 – 2
93340–21505	14 – 16
93410–26067	15 – 5
93410–67085	21 – 53
93440–10085	14 – 18
93440–10153	7 – 4
93440–28062	15 – 14
93440–41178	4 – 3

PART NO.	REF. NO.
93450–22027	2 – 21
93503–08007	12 – 39
93515–32029	14 – 19
93603–16219	7 – 3
93604–10011	5 – 8
93608–30002	16 – 16
93612–16254	1 – 26
93700–06004	24 – 26
	24 – 27
93900–00022	29 – 3
93900–00030	27 – 3
	27 – 6
94107–10025	27 – 2
	27 – 5
94110–09025	29 – 2
94582–13098	29 – 23
94591–57120	4 – 4
94701–00330	1 – 12
95022–06008	41 – 45
95022–06010	1 – 8
	41 – 63
95022–06012	6 – 7
	11 – 26
	34 – 26
95022–06014	15 – 31
95022–06020	12 – 15
95022–06025	4 – 7
	37 – 9
95022–06030	5 – 9
	12 – 28
	12 – 44
95022–06035	1 – 10
	1 – 27
	12 – 11
95022–06040	12 – 29
	12 – 43
95022–06065	12 – 10
95022–06080	12 – 46
95022–10016	11 – 9
95302–05700	31 – 19
95302–06800	25 – 18
95312–06600	32 – 19
95602–05100	31 – 10
95602–05200	33 – 13
95602–06100	40 – 7
95602–06200	19 – 24
	19 – 32
95602–08200	19 – 36

PART NO.	REF. NO.
95604–06100	32 – 9
95702–08500	10 – 7
95702–10500	27 – 14
	29 – 6
95802–06020	41 – 26
95802–06025	38 – 7
	38 – 15
	41 – 31
95812–06016	41 – 2
95812–06020	35 – 6
	41 – 6
95812–06025	21 – 42
95812–06030	25 – 10
95812–06110	8 – 34
95812–08020	35 – 2
	35 – 7
95812–10030	17 – 13
95812–12025	33 – 2
95812–12035	33 – 5
95812–12055	33 – 3
95812–12065	33 – 6
95822–06035	32 – 18
95822–08025	19 – 34
97012–08035	17 – 7
97022–08065	23 – 19
97702–50025	39 – 4
97702–60125	8 – 5
	41 – 9
98502–05010	8 – 10
98502–05020	31 – 20
	31 – 22
98506–04012	34 – 5
98507–06012	9 – 9
98902–06010	10 – 11
98980–06010	10 – 4
99009–10400	14 – 24
99009–12400	5 – 2
	7 – 10
99009–20500	14 – 27
99009–22500	12 – 24
99009–30400	24 – 3
	24 – 6
	24 – 9
	24 – 12
99530–08012	7 – 5
	12 – 14
99530–08016	12 – 9
	12 – 27

PART NO.	REF. NO.
99530–10114	7 – 15
	11 – 18
99530–10120	12 – 42
99530–14016	11 – 2
	11 – 21

PART NO.	REF. NO.